Western Engineering

VOL. 1 SAN FRANCISCO, JUNE, 1912 NO. 3

PUBLISHED MONTHLY BY THE WESTERN ENGINEERING PUBLISHING CO. AT 420 MARKET STREET, SAN FRANCISCO.

(Application for entry as second-class matter at the postoffice at San Francisco pending.)

Telephone Kearny 4777. Cable Address: Pertusola. Code: Bedford McNeill (2 editions).

BRANCH OFFICES:

CHICAGO—734 Monadnock Building. NEW YORK—29 Broadway.
LONDON—The Mining Magazine, 819 Salisbury House, E.C.

ANNUAL SUBSCRIPTION:

United States and Possessions, and Mexico..... $3
Canada 4
Other Countries in Postal Union..... 5

CHARLES T. HUTCHINSON - - Editor L. A. GREENE - - Business Manager

TABLE OF CONTENTS

EDITORIAL:
- Notes 168
- Bridging San Francisco Bay 170
- Rate Fixing 170

REVIEW OF THE MONTH 172

ARTICLES:
- Coalinga, a Workingman's Paradise.....*Dorsey Hager* 177
- Irrigation in Northeastern Brazil (concluded).....*C. A. Waring* 185
- An Investigation of Stresses in Arched Dams.....*F. A. Post-Nikov* 195
- Rotary Well Drilling.....*Colin Campbell Rae* 202
- Water Emulsions in Crude Petroleum.....*Allen C. Wright* 207
- Tests of a Novak Patent Centrifugal Pump.....*Oscar C. Goeriz* 211

ENGINEERING DIGEST:
- Present State of Development of Large Steam Turbines.....*A. G. Christie* 216
- Rate Fixing for Electric Public Service Properties.....*George L. Hoxie* 218
- Interpretation of Cement Tests 222
- The Twin Peaks Tunnel .....*Bion J. Arnold* 225
- Some Modern Substitutes for the Swing Bridge.....*Hardy Cross* 229
- Pumping by Compressed Air.....*Herbert T. Abrams* 234

BOOK REVIEWS 237
ENGINEERING BONDS 237
COMPANY REPORTS 240
ENGINEERS' NOTE BOOK 241
ENGINEERING NEWS 242
MARKETS 248
INDUSTRIAL PROGRESS 249
CATALOGUES RECEIVED, COMMERCIAL PARAGRAPHS, PERSONAL.... 252

Generated on 2024-09-29 23:42 GMT / https://hdl.handle.net/2027/uiug.30112007837674
Public Domain, Google-digitized / http://www.hathitrust.org/access_use#pd-google

Digitized by Google

Original from
UNIVERSITY OF ILLINOIS AT
URBANA-CHAMPAIGN

EDITORIAL

THE first block plan for the Panama-Pacific Exposition forms our frontispiece this month. The portion of the site utilized is what is known as Harbor View, between Fort Mason and the Presidio reservation. It covers 625 acres and is two and one-third miles long, with a maximum width of half a mile, and a shore-line of two miles. The position of the various exposition palaces, amusement section, state and government buildings, sites for live-stock exhibit, ferry slips, and yacht harbor are shown. The plan was prepared by the architectural department and shows a grouping at once convenient, accessible, and exceptionally beautiful in its general aspect.

TECHNICAL terminology is regarded as a mysterious and awesome thing by the layman, as embodying the secrets of nature which are beyond the ordinary ken. *Munsey's Magazine* expressed regret some months ago that the deliberations of one of the Engineering Societies were couched in such language as to be beyond the understanding of the average citizen. It has fallen to the lot of one of the gentle sex, however, to brush aside all precedent and give the following simple description of the manufacture of locomotives, resulting from a visit to the Baldwin works: "You pour," she said, "a lot of sand into a lot of boxes, and you throw old stove-lids and things into the furnace, and then you empty the molten stream into a hole in the sand, and everybody yells and swears. Then you pour it out and let it cool and pound it, and then you put it in a thing that bores holes in it. Then you screw it together, and paint it, and put steam in it, and it goes splendidly; and they take it to a drafting room and make a blueprint of it. But one thing I forgot—they have to make a boiler. One man gets inside and one gets outside, and they pound frightfully, and then they tie it to the other thing—and you ought to see it go!"

EUROPE continues to be occupied all too much with war and the rumors of war. Industrial strife has been piled on military contest, and the coal strike in England, with threatened strikes in Germany and the United States, led to sailing close to the wind. Oil as well as wind bids fair, however, to come to the rescue of the sailors, if coal be not forthcoming. The *Selandia*, now on her first regular trip from London to the Far East, is, it will be remembered, the largest motor vessel yet built, her displacement being 10,200 tons, and carrying capacity 7400 tons. It is estimated that a saving of $50,000 per year will be made in fuel alone as compared with operating costs with steam, and in addition there is a material saving in space. Power is furnished by 8-cylinder Burmeister & Wain engines built on the Diesel principle, and are capable of developing 3400 indicated horse-power, although for sea conditions a limit of 3000 has been fixed. This gives a sea speed of over 11 knots. Each engine consumes 500 pounds of oil per hour. The fuel is stored in the double bottoms, the total storage ca-

Generated on 2024-09-29 23:44 GMT / https://hdl.handle.net/2027/uiug.30112007837674
Public Domain, Google-digitized / http://www.hathitrust.org/access_use#pd-google
Digitized by Google
Original from
UNIVERSITY OF ILLINOIS AT
URBANA-CHAMPAIGN

pacity being 900 tons, which is sufficient for a round-trip voyage of 20,000 miles at full power. The *Selandia* is now on her maiden voyage to Bangkok, Siam, with several ports of call en route. Two sister ships are being built on the Clyde. The results of actual operation will be watched with a great deal of interest, particularly by men concerned with Pacific Coast shipping, where the proximity to the California oilfields suggests new possibilities for cheap transportation.

VICTORIA, one of the most progressive states in Australia, is making well directed efforts to attract experienced farmers to the lands now coming under irrigation as a result of great works built by the state. It will be remembered that a few years ago Mr. Elwood Mead, formerly state engineer for Wyoming and later chief of irrigation investigations of the United States Department of Agriculture, was called to Victoria to take charge of the work then about to be undertaken. Victoria has large areas of land suitable for irrigation and a population of only 14 persons per square mile. To make homes for more people, dams have been built, ditches dug, and in cases fields have been plowed and houses built to attract settlers. The Goulburn irrigation system, now nearing completion, is to provide eventually for 750,000 acres of land. Reservoirs have already been constructed with a capacity of 220,000 acre-feet and surveys have been made for works that will increase this storage to 1,400,000 acre-feet of water. A granite dam, 400 feet long and 50 feet high, delivers water to ditches on either side of the stream. At Waranga, 24 miles away, is an artificial storage lake of 196,000 acre-feet capacity, capable of being increased to 326,000 acre-feet. Other large works are under construction. The Victorian government sells land to settlers on terms that involve a payment of 3 per cent down with 3 per cent semi-annually thereafter. As 4½ per cent is charged on deferred payments, the land becomes fully paid for at the end of 31½ years. The price of the land varies with its quality and situation. Steamship and railway fares are rebated to accredited colonists after purchase of land, and payments may be commuted after six years. As Victoria is in itself an alluring country, these terms are attracting an excellent class of settlers. Several parties have gone from the United States, and they will help to bind the two great commonwealths together.

THROUGH steamship traffic between New York and San Francisco coincident with the opening of the Panama canal will soon be inaugurated. The Pacific Mail Steamship Company, which first sent its ships around the Horn and later built up a large traffic across the Isthmus, has ordered new boats and will make a strong effort to capture the expected new trade. The American Transportation Company, recently incorporated in Delaware, has the honor, however, of being the first American company to organize especially for trade through the canal. Three vessels have been contracted for and are under construction in Detroit shipyards. They will be built exclusively for freight and will have a cargo capacity of 4100 tons each, with a draught of 24 feet, and will be arranged to burn either coal or oil. In the meantime our British cousins have not been idle, as is shown by the announcement that the Royal Steam Packet Company, of London, will operate a through line of steamers between England and

Generated on 2024-09-29 23:44 GMT / https://hdl.handle.net/2027/uiug.30112007837674
Public Domain, Google-digitized / http://www.hathitrust.org/access_use#pd-google
Digitized by Google
Original from
UNIVERSITY OF ILLINOIS AT
URBANA-CHAMPAIGN

Pacific Coast ports. In line with this program they have purchased outright the Union Castle line of 44 steamers, the amount involved being $25,867,863. The Packet company itself has 49 steamers and also operates subsidiary companies including the Elder-Dempster with 112 steamers, Lampert & Holt, 46 steamers, Pacific Steam Navigation Company, 37 steamers, and the Glen and Shire lines of 7 steamers. The total number of steamers controlled and owned by the Royal Mail Packet Company is 295, aggregating 1,380,570 tons.

Bridging San Francisco Bay

A suspension bridge across San Francisco bay has been proposed by Allen C. Rush of Los Angeles. A bill was passed by the U. S. Senate on April 30 granting a right-of-way across the Presidio reservations and Yerba Buena island. The plan submitted to the Supervisors of San Francisco calls for a bridge nine and a half miles long to be built at an estimated cost of $26,000,000. The San Francisco approach is placed at Lombard street, on Telegraph hill, and extends to Jones street. The bridge crosses Goat island and extends in a straight line from the San Francisco end to the Oakland terminal, running over the Oakland tidelands north of the Key Route railway and ending near Emeryville.

The distances given are as follows: San Francisco to Goat island, 9370 feet; Goat island surface line, 4000 feet; Goat island to pier No. 10 on the Oakland side, 8920 feet; pier No. 1, at the San Francisco shore, to the San Francisco terminus, 14,000 feet; pier No. 8 to the Oakland terminus, 14,000 feet; total distance, 50,290 feet.

There are to be ten piers, with a distance of 2230 feet between each two. The clearance in the channel on each side of Goat island will be 150 feet. The estimated depth to rock bottom in the bay is between 140 and 150 feet. The depth of the water at the piers is marked as follows: No. 2, 54 feet; No. 3, 87; No. 4, 116; No. 7, 42; No. 8, 12; No. 9, 17; and No. 10, 6½ feet.

The height of pier No. 1 at the San Francisco side and of pier No. 10 at the Oakland side is to be 1400 feet, and the summit of each may be used for a United States light signal. The bridge is to be a double-decker, with separate passage-ways for steam cars, street-cars, automobiles, horse-drawn vehicles, and bicycles, as well as for pedestrians.

While the many engineering difficulties involved in so great an undertaking may not be insurmountable, it is a question whether the present transbay traffic is great enough to make so costly an undertaking pay. That such a bridge would greatly stimulate the growth of Alameda county goes without saying, but even making all possible allowances for increased traffic, it would seem that the project is at least fifty years ahead of the times.

Rate Fixing

RATE FIXING is a subject upon which public-service corporations and city supervisors lock horns annually, and, if one may judge by opinions publicly expressed, neither side is ever satisfied with the results. The views of Mr. George L. Hoxie, appearing in THE ENGINEERING DIGEST this month, are of particular interest, because of his wide experience. The determination of just what is 'proper return' and what constitutes 'investment' are the ever-recurring bones of contention, the latter especially being a question upon which

Generated on 2024-09-29 23:44 GMT / https://hdl.handle.net/2027/uiug.30112007837674
Public Domain, Google-digitized / http://www.hathitrust.org/access_use#pd-google
Digitized by Google
Original from UNIVERSITY OF ILLINOIS AT URBANA-CHAMPAIGN

widely varying opinion may be obtained. Mr. George J. Henry, Jr., in discussing the matter in April and referring to the proper return necessary to interest capital in placing large engineering projects upon a productive basis, differentiated between 'risk' and 'venture', defining the former as "the chance taken by capital on every point that *cannot* be foreseen by the average financial mind," and the latter as "the chance taken that *can* be foreseen by the average financial mind." He contends further that unless an absolutely monopolistic franchise be granted to the corporation, when the consuming capacity of the community served may be calculated to a tolerable degree of certainty, that capital is entitled to compensation in the form of interest on the basis of an absolutely secure investment; additional interest for the element of 'venture', and additional interest for the element of 'risk.' Mr. Henry's contention seems reasonable, the stumbling-block being the difficulty emphasized by Mr. Hoxie in determining what constitutes 'capital invested.' The integrated judgment of investors as reflected by the prices offered for stock forms only one method of arriving at a conclusion on this point, as the possibilities of dividends as well as the speculative opportunities in the stock itself influence buyers.

It is well-nigh impossible to determine the amount of cash actually invested in a large corporation that has been in existence for any length of time, as the process of stock watering has been reduced to such a science by the master manipulators that a corps of expert accountants would be at a loss to trace the financial history of the large corporations back through the formative period and state definitely from the records how much actual cash outlay was represented in the investment. Stock watering is a growth of comparatively recent years, and is carried on primarily as a means of compensating promoters for their labors in organizing and putting an infant industry on its financial feet, in which, incidentally, they use for that purpose money other than their own. While this practice has come in for a great deal of deserved condemnation by reason of the many excesses committed by our 'Napoleons of Finance' during the high tide of financial prosperity a few years ago, it cannot be gainsaid that the promoter fills a useful function and is entitled to a just compensation according to the value of his services; there is a place for stock watering, but not for unlimited water.

The growing disposition to place the fixing of rates for all public service corporations in the hands of permanent or slowly changing boards of a semi-judicial character is one of the striking developments of the last quarter century. In states and cities where such boards have taken fullest advantage of expert service the results have been strikingly the best. When the members of the board have been unwilling to pay for independent technical service or unwilling to profit by it, rates have often been fixed too high or too low; and in the end either is bad for the public.

The whole subject is one that is replete with puzzles, and should be studied carefully and deliberately with a mind free from disposition to deny to a corporation a just and equal return for its investment merely because it is a corporation, and at the same time with a disposition to conserve the interests of the people as a whole, who, first, last, and all the time, are the creators of value.

Generated on 2024-09-29 23:42 GMT / https://hdl.handle.net/2027/uiug.30112007837674
Public Domain, Google-digitized / http://www.hathitrust.org/access_use#pd-google
Digitized by Google
Original from
UNIVERSITY OF ILLINOIS AT
URBANA-CHAMPAIGN

REVIEW OF THE MONTH

LABOR TROUBLE is the keynote for the month. In spring the young man's fancy lightly turns to thoughts of higher wages and a cottage all his own, while the summer harvest season affords a means of livelihood for the city wage-worker while out on strike. Every part of the country is affected by these periodic labor disturbances. Even the construction of San Francisco's municipal railroad was temporarily delayed by a dispute over the old question of open versus closed shop, settlement having finally been made by the contractors granting the closed shop.

PORTLAND is the scene of a laborers' strike among men employed on construction and repair work by the Portland Railway Light & Power Company. The omnipresent Industrial Workers of the World are the instigators, $2 per day in their judgment not being a sufficiently high wage for unskilled labor. The men themselves are all foreigners, and it would be interesting to compare wages in the country from which they came with those that here produce dissatisfaction. In San Diego the situation is reversed. The Industrial Workers of the World, refusing to work, become the Industrial Talkers of the World, and proclaim from street corners their fervent desire to work, meanwhile demanding tribute from locality after locality as the price of their going away.

SAN DIEGO has been the centre of unusual agitation. The situation has become acute and many acts of lawlessness on the part of both citizens and Industrial Workers have taken place. The Governor, Hiram Johnson, acted promptly, however, sending the Attorney General and his chief deputy to see that the law is observed and that justice is administered impartially. Truckers employed in the Canadian Pacific freight sheds at Vancouver, British Columbia, have struck for higher wages, as have also the freight handlers in Chicago. A strike that would have paralyzed the industry of the whole country was narrowly averted when it was decided that the demands of the American Brotherhood of Locomotive Engineers should be submitted to arbitration.

AFTER forty days of idleness 170,000 anthracite coal miners in the Pennsylvania fields returned to work under a new wage schedule. In England there still remains a feeling of dissatisfaction on the part of the Miners' Federation over the recently enacted minimum-wage act, but it is hoped that the whole matter may soon be adjusted in a manner satisfactory to both sides and that no renewal of the recent disturbance may take place. Taken as a whole, the season's labor trouble is rather less than usual. There have been no serious disturbances in the iron trades, the Los Angeles strike having suffered a slump following the trial and confession of the McNamaras, and it is to be hoped that the usual unsettled conditions of business on account of the coming presidential election may be the only impediment in the way of increased activity in every line of industry.

Generated on 2024-09-29 23:43 GMT / https://hdl.handle.net/2027/uiug.30112007837674
Public Domain, Google-digitized / http://www.hathitrust.org/access_use#pd-google
Digitized by Google
Original from
UNIVERSITY OF ILLINOIS AT
URBANA-CHAMPAIGN

CALIFORNIA oil industry has received recognition at the hands of the House Committee on Naval Affairs, which has decided to include in the naval appropriation bill two fuel-oil tankers to carry oil for the new battleships *Nevada* and *Oklahoma*. Oil-men have worked hard and persistently to obtain Government recognition of the permanence and stability of their industry, and it is to be hoped that ultimately the entire Pacific fleet may be converted to burn oil.

IRRIGATION methods as practised in California are finding favor in foreign countries, as is shown by the presence in California of Mr. Niel Nielsen, Member of Parliament, New South Wales. Mr. Nielsen has just completed an inspection tour of four months in which he visited all of the large irrigation projects in the West, and will recommend the adoption of American methods in carrying out the large irrigation projects now under way in Australia. The sum of $27,000,000 is to be expended in New South Wales alone, and will provide for a reservoir larger than the Roosevelt in Arizona. In Victoria an American engineer is already building irrigation works for the state and Californians are settling as colonists.

PIG IRON from California has a strange sound in Western ears; nevertheless, the first carload of pig iron ever sent out of the state was shipped by the Noble Electric Steel Company from Heroult to Salt Lake City on May 9. The public has followed the experiments conducted by Mr. Noble and his assistants with great interest, and the courage and persistence with which they have met and overcome many difficulties are deserving of the greatest praise. A new practice in the reduction of iron ores had to be developed for which there were no precedents. New apparatus was built, discarded, and rebuilt time and time again, and it is sincerely to be hoped that their efforts may be rewarded with success and that the process that has cost so much time and money for development may soon become commercially profitable.

FREE TOLLS through the Panama canal for coastwise vessels have been provided for in a bill that passed the House on May 23. Another clause contained in the bill that will be of far-reaching effect, provides that free tolls are not extended to ships owned or controlled directly or indirectly by railroads or corporations affiliated with railroads. The authority of the Interstate Commerce Commission is extended to cover coastwise shipping when steamship lines are owned or controlled by railroads engaged in interstate traffic, and tends to prevent stifling the competition of independently owned coastwise steamers. The bill provides further that tolls shall not exceed $1.25 per net registered ton for American ships, while in the case of foreign ships tolls shall be charged on the basis of the estimated proportionate cost of actual maintenance and operation of the canal. The result of placing this bill into effect should prove beneficial to American shipping, as it practically subsidizes American vessels engaged in the coast-to-coast trade. At the same time, it is believed that it will not interfere with our treaty relations with foreign nations, for as far as international traffic through the canal is concerned, the vessels of all nations, including our own, would be on an equal footing. All signs point to a prosper-

Generated on 2024-09-29 23:42 GMT / https://hdl.handle.net/2027/uiug.30112007837674
Public Domain, Google-digitized / http://www.hathitrust.org/access_use#pd-google
Digitized by Google
Original from UNIVERSITY OF ILLINOIS AT URBANA-CHAMPAIGN

ous future for Pacific Coast shipping. Free tolls for American coastwise vessels through the canal, together with the wonderful development of the California oil industry and the possibility of further economies through the introduction of the Diesel engine combine to promise better times.

ACCORDING to compilations made by the Bureau of Railway Economics from reports of the railway companies for March that had been filed with the Interstate Commerce Commission prior to May 16, 90 per cent of the steam railway mileage of the United States shows an aggregate increase in operating revenues of $12,661,901 as compared with March 1911. Operating expenses showed an increase of $12,152,394, and net operating revenue an increase of $509,507. This increase in the total of net operating revenue was due solely to the larger returns incident to an increase in railway mileage. When the returns are measured by the average per mile, the only proper basis for comparison, the net operating revenue shows a decrease. The average was $306 per mile of line for March 1912 and $309 for March 1911.

THE largest vessel in the world was launched at Hamburg on May 23 by the Hamburg-American Steamship Company and christened *Imperator* by the German Emperor. This new monster of the deep is over 900 feet long, 96-foot beam, draws 36 feet of water, and when completed will displace over 70,000 tons and register 50,000 tons. There are nine decks above the water-line, the height from the water-line to the top of the masts is over 200 feet. Even the Metropolitan tower fails as a means of comparison, and Broadway, New York, is not so wide as this enormous vessel. The passenger-carrying capacity is in excess of 5000, and creature comforts are provided on a scale far beyond anything that has yet been attempted. The height of the masts is such that the vessel will always be within wireless communication with the shore. Three shifts of operators will be employed, so that at no time will the *Imperator* be cut off from communication with other ocean travelers. It is expected that the steamer will go into commission on the New York-Hamburg run early in 1913, and that, profiting by the lesson taught by the ill-fated *Titanic*, the life-saving equipment will be adequate and efficient.

THE advent of the Diesel engine in England has caused alarm among men interested in the coal industry. The complete cessation of industrial activity during the recent coal strike has given great impetus to the introduction of internal-combustion engines of all types, as the dependence of the entire people upon fuel was greatly emphasized during the period of the strike. A correspondent of the London *Times*, however, is greatly exercised for fear that oil may ultimately replace coal in the United Kingdom, and while he does not deny that Mr. Diesel is undoubtedly deserving of great credit for bringing the oil-engine of today to its present commercial success, has drawn comparisons between the economies achieved by the Diesel engine and of other internal-combustion engines using producer gas which, from an English standpoint, are in favor of the latter. In some tests of a producer-gas engine made in England, the fuel, as a matter of course, was an excellent quality of English coke, costing 10s. per ton delivered. A full-load test was

Generated on 2024-09-29 23:53 GMT / https://hdl.handle.net/2027/uiug.30112007837674
Public Domain, Google-digitized / http://www.hathitrust.org/access_use#pd-google
Digitized by Google
Original from
UNIVERSITY OF ILLINOIS AT
URBANA-CHAMPAIGN

made extending over a period of eight hours, and resulted in a fuel consumption of 1¼ pounds per brake-horsepower, giving an equivalent fuel cost of 0.067d. per brake-horsepower per hour; the engine in question being a high-speed type of about 300 brake-horsepower. The test of a Diesel engine of approximately the same size showed a consumption of 0.435 pound of oil per brake-horsepower at full load, which with oil at 50s. per ton, shows a fuel cost of 0.12d. per brake-horsepower-hour, or nearly double the cost of operating the producer-gas engine. Further comparisons are drawn on the item of first cost. It is stated that a complete gas-engine plant of moderate size can be built for about £9 per brake-horsepower, while the cost of the Diesel plant would be about £11 per brake-horsepower. A producer-gas engine plant might well be more economical in operation in England than a Diesel-engined plant, by reason of the fact that Great Britain produces what is probably the finest coal in the world, but must rely upon outside sources of supply for crude or refined oil. On the Pacific Coast of the United States, however, the position of the two classes of fuel are exactly reversed. California produces a wealth of oil, of which the lowest grade is at present sold for about 30 cents per barrel at the well. Figuring on a tonnage basis would make the cost of California oil per ton at the well approximately $1.80, which is quite different from 50 shillings or $12.50 per ton, the prevailing price in England. Good anthracite coal or coke at $2.50 per ton would suggest the millenium to the residents of the Pacific Coast. Welsh anthracite has been imported for use in conducting trial trips on the Pacific Coast for battleships and cruisers at a price very nearly ten times as great as the cost in England, while during periods of shortage, the best quality of bituminous coal in San Francisco has sold for domestic purposes at $18 per ton. It would appear that the Diesel engine promises to be as much of a boon to the people of the Pacific Coast as a menace to the coal industry of Great Britain.

PACIFIC COAST shipping has commenced to respond to the impetus given by the prospective opening of the Panama canal, and preparation is under way to take care of a large increase in ocean traffic. The year will see eleven new steamers of American register in the Pacific Coast trade. Five of the steamers are being constructed in the shipbuilding yards of the Pacific Coast, while the other six are on the ways in shipyards of the East. Swayne & Hoyt's new vessel, the *Camino*, which is nearing completion at Long Beach, is a steel craft, passenger and freight carrying, costing $300,000, and will be ready for service by June. It is planned to place the vessel on the Panama run when the waterway is opened. The dimensions are: keel, 312 feet; beam, 44 feet; hold, 22 feet. There are accommodations for 140 passengers. The vessel is of the well-deck type, similar to the *Navajo*. Wilson Brothers & Co.'s steel steamer *Columbia* is nearing completion at Wilmington, Delaware, and is a 2600-ton craft with accommodations for 70 passengers. It will be placed on the Grays Harbor-San Francisco run and will be here by September. The cost is about $260,000. A duplicate of the *California* is being built at the Wilmington yards for the Olson & Mahony company. It is a passenger and freight carrier, with accommodations for 70 passengers. The cost is about $230,000 and the vessel

Generated on 2024-09-29 23:45 GMT / https://hdl.handle.net/2027/uiug.30112007837674
Public Domain, Google-digitized / http://www.hathitrust.org/access_use#pd-google
Digitized by Google
Original from UNIVERSITY OF ILLINOIS AT URBANA-CHAMPAIGN

is expected to be in the coast trade by September. W. R. Grace & Co. has placed orders with a Philadelphia shipyard for a steamer of American register which will be placed on the West Coast run. The extensive business of this firm is now conducted under the British flag. The *Davenport*, a wooden steamer for the Coast lumber trade, is being built at Coos Bay for J. O. Davenport & Co. at a cost of about $130,000 and is to be ready by September. It will carry 900,000 feet of lumber. The *Avalon*, being built at Grays Harbor for Hart-Wood Company, is a $125,000 wooden steamer for the lumber trade, and is to be ready in September for the Willapa-San Pedro run. The *Siskiyou*, a lumber carrier, is being built at Grays Harbor for the E. K. Wood company, and the *Speedwell* at Coos Bay for A. F. Estabrook. A new steamer is being built at Newport News for the C. A. Smith Lumber Company and will be ready probably in December. The Pacific Coast Steamship Company, whose general manager, George H. Higbee, has recently been in the East, has concluded a contract with the New York Shipbuilding Company of Camden, New Jersey, for construction of two coastwise steamers of a length of 440.6 feet, breadth of 53 feet, and draft of 24 feet, with 10,000 tons displacement, a speed of 16½ knots, and 7000 horse-power. Construction will be in accordance with the rules of the American Bureau of Shipping for its class A-1 vessels. The San Pedro, Los Angeles & Salt Lake railroad has concluded an agreement with the Robert Dollar Steamship Company for freight interchange through Los Angeles with the Far East, including Manila. Steamers on a monthly schedule will be operated. This is the first of the Southwestern roads to provide transpacific arrangements and marks the beginning of a regular service from San Pedro.

ONE of the features of the month that has not received as much attention as it deserves was the introduction in the Senate at Washington of a certain bill for the building of Alaskan railways. Not that there has been any lack of such bills, but that this one has been framed by a committee of Alaskans having full knowledge of the local situation and is in such terms as seems possible of general support. It is what is known generally as the '1000 mile' bill and provides in substance that the President, acting through a commission presided over by an Army engineer, shall build 1000 miles of railway in Alaska wherever in his judgment is best. He is to be free to use equipment and materials now employed at Panama as they become available, and funds for the work are to be provided by the sale as needed of 3 per cent bonds secured by mortgage on the line. An appropriation of $1,000,000 is made for the beginning of the work, but this is to be refunded from the bond sales. Full authority is given to negotiate with existing lines for their purchase, for running rights, or for transportation of materials and freight. In case these lines are not bought, joint rates are to be under jurisdiction of the Interstate Commerce Commission. Until Congress shall provide for operation of the properties by lease or otherwise the President is directed to run them as postal, and military routes open for transportation to the general public. Experience at Panama shows that the Government can build and, if need be, operate, railways without excessive cost. It is purely a question whether Alaska is to be developed or not.

Generated on 2024-09-29 23:41 GMT / https://hdl.handle.net/2027/uiug.30112007837674
Public Domain, Google-digitized / http://www.hathitrust.org/access_use#pd-google
Digitized by Google
Original from UNIVERSITY OF ILLINOIS AT URBANA-CHAMPAIGN

Coalinga, a Workingman's Paradise

By DORSEY HAGER

COALINGA is in the western part of Fresno county, California, and lies at the base of the foothills of the coast range at an altitude of 670 to 1500 ft. above sea-level. The oilfield extends 16 miles along the border of the hills and is reached by a branch line of the Southern Pacific railroad running from Fresno to Alcalde. Two passenger trains each way constitute the daily train service. The town is built in the midst of a desert which stretches away for miles from the base of the hills. Not a green thing appears on it in summer, while the hills, green in the spring, are burned to a dark brown by the time early summer has come. Rain falls in February and March, four to six inches being the total precipitation. The rest of the year is dry, with the exception of a few light rains in the autumn. The mud in the rainy season is far worse than the rains, and is so deep and sticky that it checks travel materially for a few weeks. The temperature varies between a minimum of a few degrees below freezing and a maximum of 120°F. The average falls somewhere in the 80's, though the average summer heat is considerably over 90°. The high temperatures of summer occur only during the day. The nights are generally cool and one nearly always can sleep soundly from midnight on. A temperature of 120° here is not nearly as unpleasant as 90° east of the Rockies, since the humidity is slight. The skies are nearly cloudless in the late spring, summer, and fall. The dust of the dry season becomes unpleasant when wind storms arise, which, however, are not frequent. The weather is generally so pleasant that a workingman does not need to lose a day's work on account of weather conditions, except when engaged on outside work during the rainy season. Natural drinking water is scarce, but this deficiency is made good by distilling the local waters which contain high percentages of magnesia and a few alkaline salts, readily separated in this way. Good drinking water is essential in such a warm climate, as the men perspire freely. Sun-strokes, however, are almost unheard of in Coalinga. Mosquitoes are few, as no swamps exist for breeding places. Fleas are scarce. Ants and flies are the only vexatious insects, and even they are not very troublesome. Sickness is rare, occasional stomach trouble being the most common illness, but on the whole the climate is conducive to good health. Such is the Coalinga climate, which, together with the isolation of the place, constitute the only drawbacks of consequence to the field.

Five main divisions of labor are recognized in the petroleum industry: (*a*) drilling; (*b*) operating; (*c*) transportation of oil; (*d*) refining; and (*e*) marketing. Of these five, the last two are generally carried on away from the field, and hence are not considered in this article. Transportation is an im-

Generated on 2024-09-29 23:43 GMT / https://hdl.handle.net/2027/uiug.30112007837674
Public Domain, Google-digitized / http://www.hathitrust.org/access_use#pd-google
Digitized by Google
Original from
UNIVERSITY OF ILLINOIS AT
URBANA-CHAMPAIGN

portant branch of oilfield work, but as the number of men employed is comparatively small, only the divisions of labor under drilling and operating will be considered. Fig. 1 shows the organization of labor as practised by the largest companies.

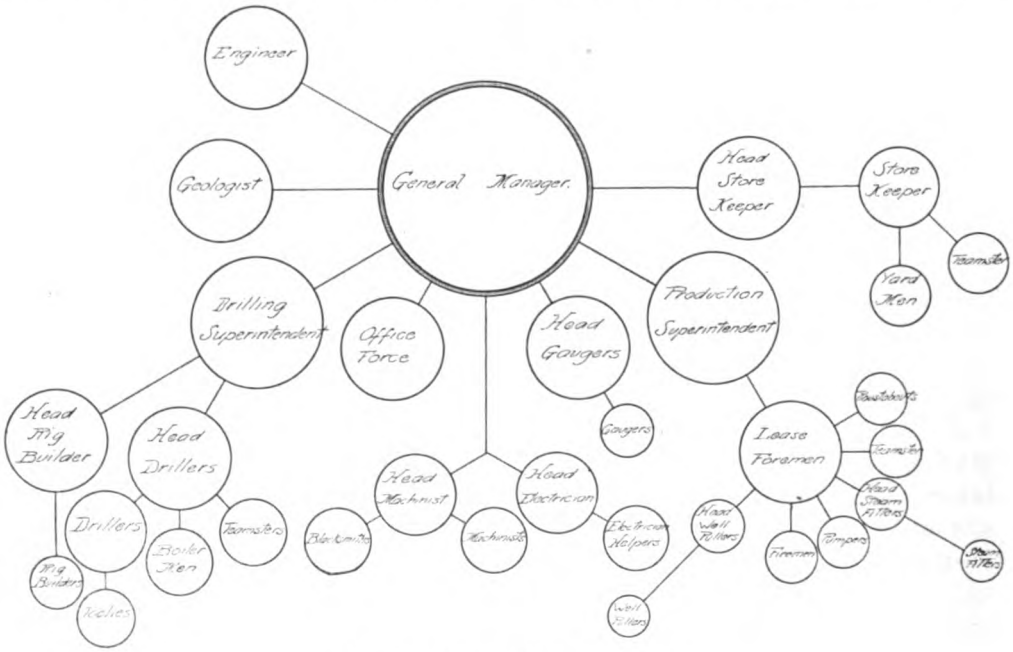

FIG. 1. DISTRIBUTION OF LABOR.

The branches of laborers peculiar to the oil business classified under 'drilling' are: (*a*) rig builders, and (*b*) drillers; under operation or production, (*a*) well pullers, and (*b*) pumpers. All other branches are subsidiary to these. Engineers, geologists, gaugers, machinists, electricians, boiler men, and teamsters are common to both departments. The rig builders are the carpenters who erect and repair the derricks. Their work necessitates climbing to considerable heights, which requires a great deal of daring. The drillers and their helpers ('toolies') do the boring for oil. The well pullers pull and clean the well, replace worn-out pumps and do similar work. The pumpers oil the pumping engines and transmission machinery and tend the wells. The following table shows the rate of wages paid:

WAGES AT COALINGA

Kind of labor.	Wage.	Hours per day.	Days per week.
Rig builders	$4.50-5.00	9	7
Drillers	7.00	12	7
'Toolies'	4.50	12	7
Well pullers:			
Head pullers	4.00-4.50	..	..
Helpers	3.25-3.50	..	..
Pumpers	3.50	12	7
Firemen	3.50	12	7
Blacksmiths	4.00-6.00	10	6
Teamsters	3.25	10	7
Roustabouts	3.00	10	7
Steam-fitters	3.50-4.50	10	7
Machinists (union scale)	35c. to 85c. per hour.	9	6

Generated on 2024-09-29 23:46 GMT / https://hdl.handle.net/2027/uiug.30112007837674
Public Domain, Google-digitized / http://www.hathitrust.org/access_use#pd-google
Digitized by Google
Original from UNIVERSITY OF ILLINOIS AT URBANA-CHAMPAIGN

All told, there are some 5000 men* employed in the field. Referring to the table above, it will be noted that $3 per day of 10 hours is the minimum wage paid. There are minor differences over the field, but the rates quoted above are general. Board is deducted at the rate of $1 per day, and wages are quoted in the field at '$2 and board.' Married men are exempt from this deduction. As will be noticed, seven days is the average working week. The workingman labors 365 days per year in the fields. If he wants a 'lay off' it is readily obtained, and when the man returns to work his job is given to him without question. The shortest working day is 9 hours, the longest 12 hours.

Drillers, toolies, firemen, and oilers work the long period, as such work is divided into two shifts of 12 hours each. One shift, or 'tower' (or tour), is from 12 noon to 12 midnight, the other 12 midnight to 12 noon. Twelve hours make a long working day, but the drillers and their helpers are a sturdy lot and can stand the grind. The wages are high and the work does not overtax the men. The morning 'tower' men on shift from 12 midnight to 12 noon are prone to sleep on duty. They often secure several hours sleep at this time. This, however, is but natural, and in the hot summer months these hours are the only ones in which a man can obtain sufficient rest. The pumpers and firemen also get some of their sleep on duty. There is a saying in the field that "a man is a poor pumper who can't get a few hours sleep on 'tower'."

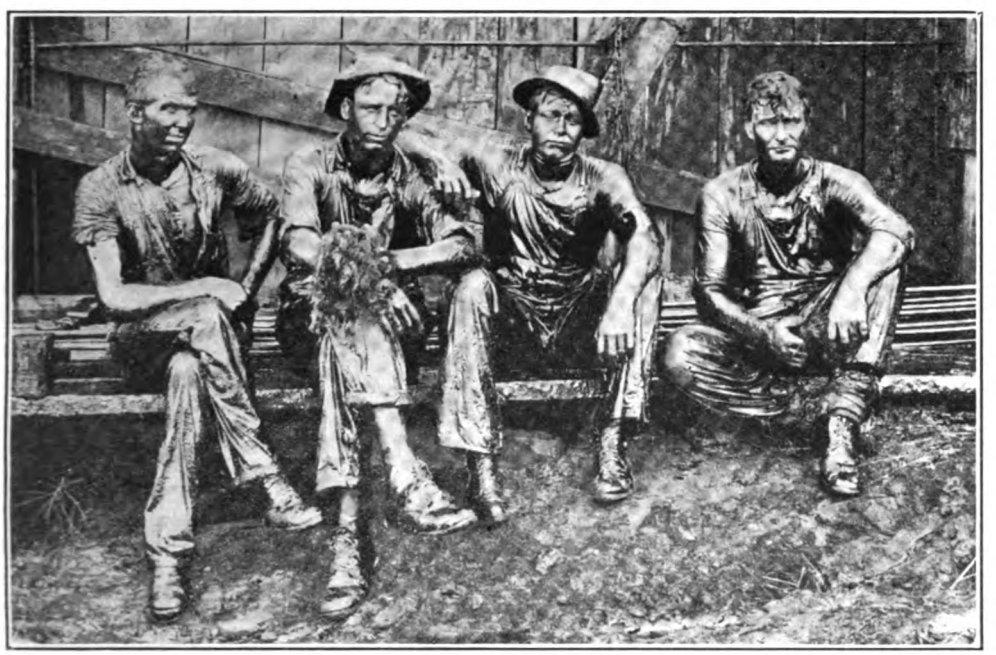

FIG. 2. RESULT OF PULLING A PUMP FROM A FLOWING WELL.

Drillers, toolies, pumpers, and well pullers all work in the shelter of the rigs, which form a shield from the rains

*This figure is an estimate.

Generated on 2024-09-29 23:44 GMT / https://hdl.handle.net/2027/uiug.30112007837674
Public Domain, Google-digitized / http://www.hathitrust.org/access_use#pd-google
Digitized by Google
Original from UNIVERSITY OF ILLINOIS AT URBANA-CHAMPAIGN

and winds of winter and afford shade in summer. One is surprised at the comfort at a rig, which even in the hottest days is comparatively cool. Teamsters and roustabouts are the only men that work in the open to any great extent.

Perhaps the most unpleasant feature of oilfield work is the work of the well pullers when pulling a pump from a flowing well. This is called a 'wet' job. The oil driven by the gas often flows violently, and the men are forced to dive into the shower of oil to do their work. Some men wear 'sou'westers,' but while such protection may save a drenching to the skin, it does not afford protection to the eyes. Goggles are useless, as they are quickly smeared with oil and shut off the sight. Most workers put on their oldest clothes, or in hot weather strip to the waist and plunge into the dark brown shower. Their lungs become filled with gas and their eyes smart from the oil. Such jobs may last several hours and test a man's power of endurance. A half a day overtime is the general extra pay allowed for such a job. Fig. 2 shows a gang of men who have just finished a difficult piece of work. They are not negroes; just whites soaked in California oil.

A surprisingly small number of accidents occur. As I have no reliable estimates as to the numbers, I can only say that it is a wonder there are not more men killed or severely injured. Accidents happen on account of objects dropped from the derrick; men become entangled in bull-ropes or drilling lines; they are caught in working machinery; they fall from derricks; explosions sometimes happen due to combustion of distillate or gasoline. The rule in a derrick when anything goes wrong aloft is to throw the brake and dodge for shelter. Drillers have occasionally become entangled in drilling cables and wound upon the bull or calf-wheels, and their lives crushed out. Occasionally a man is caught in the engine parts, notably the fly-wheel, and spun around to his death. Falling from derricks is a common form of accident. A man often becomes careless when working 80 or 90 ft. above ground and sometimes pays the penalty. A slip, a broken girt or ladder rung, may precipitate him below. Sometimes, too, a man may ride on the heavy tubing or drilling block and sheave that are used to pull tubing and casing. A sudden twisting of the tubing lines precipitates him below and he is killed or severely crippled for life. Explosions have been the cause of some deaths, but the use of distillate or gasoline around fires is criminally careless. Most accidents are the result of carelessness, as no employer will ask his men to risk their lives for the sake of an oil well whether it costs $25,000 or $100,000. Some large companies in the field collect 50c. to $1 per month from their employees which goes into a fund for doctors and hospital expenses. This is an excellent plan, as the men are certain of being cared for when injured. Men badly crippled but able to be about are taken back and given easy work. Pensions have not been adopted as yet.

Oil workers here are principally Americans, every state in the Union being represented. At Coalinga, however, there are a number of Englishmen and Scotchmen, due to the fact that several large concerns are owned by Englishmen. Mexicans are native to the Coalinga fields, a few living in the hills nearby. Canadians, Australians, and New Zealanders are also represented. Chinese and Japanese work in some camps, but only as cooks and

Generated on 2024-09-29 23:45 GMT / https://hdl.handle.net/2027/uiug.30112007837674
Public Domain, Google-digitized / http://www.hathitrust.org/access_use#pd-google
Digitized by Google
Original from UNIVERSITY OF ILLINOIS AT URBANA-CHAMPAIGN

waiters. Hindus, negroes, Italians, and Slavs are not found working in the field. The negro is absolutely tabooed by oil men. The men show all kinds and degrees of intelligence and skill. The average of intelligence is high. Illiteracy is very rare; indeed, I have encountered but two instances among many hundreds of men, one of them being a 'Canuck,' the other a half-breed Mexican. As a whole the men are exceptionally bright. They are nomads by instinct; staying here and there a few months, but always on the move seeking better opportunities. A number of them have been in the Russian and Rumanian oilfields and not a few in Burma. One finds ex-businessmen, ex-convicts, and ex-college men working side by side. What brings a man to the field is not asked. Recommendations are seldom required, and if one needs a man the first likely comer will do. 'Give him a chance to show what he can do,' is the general attitude of employers. These men are skilful workers. Each man is a 'jack of all trades,' which, while not always desirable, is certainly invaluable in the oilfields. The driller must be something of a blacksmith, carpenter, and steam-fitter, as he is called upon to sharpen and temper steel drilling bits, repair his rig when necessary, and lay steam, water, and gas lines. The well pullers do much the same kind of work, in addition to their own special duties. Nearly all workers can handle an engine, pack a pump, fire a boiler, and work around machinery without injury. One is surprised to find most of the workers young men under 30 years of age. Indeed, old men cannot stand the climate. It is a young man's country. The drillers, as a class, are made up of men older than in the other branches of work, as experience is essential, though their helpers are all young men. Pumpers and firemen are also recruited from the older men, as these occupations call for no unusual exertion.

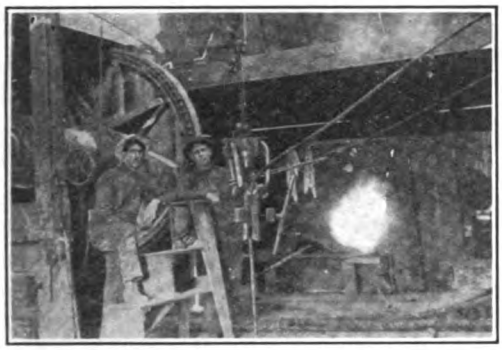

THE INTERIOR OF AN OIL RIG, WHICH IS NOT UNCOMFORTABLE IN THE HEAT OF SUMMER.

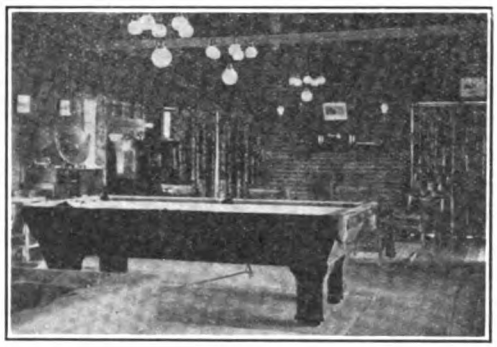

CLUB-HOUSE, A PLEASANT PLACE FOR RELAXATION AFTER A DAY OF TOIL.

Living conditions in the field as a whole are excellent. The unmarried men live in 'bunkhouses,' long frame bungalow structures with rooms opening upon broad well shaded porches. Two to four men sleep in a room 12 by 18 ft. with doors and windows at each side which insure good ventilation. Small gas heaters furnish warmth when needed. One company, the California Oil Fields, Ltd., an English concern, has made the best provision for its em-

Generated on 2024-09-29 23:41 GMT / https://hdl.handle.net/2027/uiug.30112007837674
Public Domain, Google-digitized / http://www.hathitrust.org/access_use#pd-google
Digitized by Google
Original from UNIVERSITY OF ILLINOIS AT URBANA-CHAMPAIGN

ployees of any of the companies in the field. Their camp is said to be the best equipped in the world. Certainly it is the best equipped in California. At this camp the unmarried men are housed in two-story bunkhouses. Each man has a comfortable room to himself, heated by gas, and lighted by electricity. A bathroom to every five or six rooms is the rule. Under such conditions a man has privacy and can retain his self-respect. The working man furnishes his own bedding, the company providing single iron cots for each man. These cots are easily cleaned and are free from vermin of any kind. But let me say right here that the oil man is generally cleanly, as he makes liberal use of bathing facilities. The companies generally make provision for married men by building three and four-room cottages for them. These cottages rent for $7 to $10 per month, and this includes water, and gas for heat and light. A number of tent houses may be seen on many leases where provision has not been made for company houses. These houses are furnished with water and gas gratis. The unmarried men board at the company boarding houses, which are run by contract or by the companies themselves. These cook-houses are models of cleanliness. The tables seat from 12 to 16 men each, and are covered with linoleum or oilcloth. Food is served by regular men-waiters in white aprons. Heavy crockery is used and is always clean, cleanliness being a strict rule for all cook-houses. The food is uniformly good, as the following menu will attest:

BREAKFAST

Cereals — Oatmeal
Ham and Eggs — Beefsteak
Potatoes — Hot Cakes
Bread — Butter
Tea — Coffee — Milk

DINNER

Vegetable Soup — Roast Beef
Potatoes — Lettuce
Beans — Fresh Onions
Bread — Butter — Apple Pie
Tea — Coffee — Milk

SUPPER

Liver — Potatoes — Cabbage
Olives — Bread — Butter
Canned Fruit — Cake
Tea — Coffee — Milk

This is not an unusual menu. On Sundays and holidays extras are added. No man can justly complain of such food when it is well cooked, as is usual; indeed few men, whether in California or elsewhere, receive better food. The average farmer does not live nearly so well. Some companies employ Chinese and Japanese cooks and waiters. Orientals, however, are not generally popular, and it is far more common to see white men and women employed. Indeed, so strong has been the prejudice in some camps that the Chinese and Japanese have been driven out.

Most of the companies in the field provide club-houses for their employees. These club-houses contain reading rooms and libraries, pool and card rooms. Some companies have made provision for dancing, notably the American Petroleum Co., which has an excellent dance hall and a stage for lectures and amateur theatricals. The California Oil Fields, Ltd., has a two-story building for a club-house, the lower floor containing a reading room and space for dances, assemblies, and meetings. The upper floor contains a library, pool, and billiard tables. This company also possesses a chapel where services are held regularly every Sunday for those who care to go. When a man finishes work he can go to the club-house and find pleasure in reading an interesting story, listening to a phono-

Generated on 2024-09-29 23:46 GMT / https://hdl.handle.net/2027/uiug.30112007837674
Public Domain, Google-digitized / http://www.hathitrust.org/access_use#pd-google
Digitized by Google
Original from UNIVERSITY OF ILLINOIS AT URBANA-CHAMPAIGN

graph, or playing pool or billiards. Indeed, a club-house is a God-send to the men. Liquors are strictly prohibited in the club-houses and, for that matter, on the leases. However, there is drinking in the fields. Temperance is the rule, except around monthly pay days when the 'boys' generally go to town and have a carouse which, however, seldom lasts more than a day or two, with after effects for several days. This drinking is expected, and, while not encouraged, an occasional and expected carouse that does not make a man shaky for more than a day, is considered better than regular indulgence. Saturday nights are also town nights, and the automobile stages are always full that evening.

Coalinga had a population of 4199 in 1910 and is a thriving town of considerable wealth and has several churches, and exceptionally good schools, two graded and one high. The buildings are well planned and well built, and would be a credit to any town of several times its size. For amusements, the town has a theatre which is on the Cort theatre circuit of San Francisco. Such performances as 'Polly of the Circus,' 'The Squaw Man,' and 'The Chocolate Soldier' appear once or twice a week, while moving pictures and vaudeville run every night. The saloons are mainly in one block. 'Whisky row,' the first place seen on getting off the train, is composed of a solid block of saloons. Gambling is not openly allowed, although it is carried on to some extent. Many a man leaves his monthly check in town; but such men abound everywhere, Coalinga being no exception in this respect.

WORKMEN'S QUARTERS, CALIFORNIA OILFIELDS, LIMITED.

1, 2 3, Bunk-house; 4, Club-house; 5, Cook-house; 6, Cold Storage House; 7, Store—owned by outside interests. There are no company stores in the oilfields.

Nothing is more significant of the well-being of the men than the spirit of prosperity. Like certain of our black brethren, many of the men delight in putting their wherewithal on their backs in the shape of expensive clothes. Indeed, the clothing men do a flourishing business. An oil worker will buy $40 or $50 suits and overcoats, $5 to $8 shoes, silk socks and underwear, where the same man in a city would be content with a $20 outfit.

Generated on 2024-09-29 23:42 GMT / https://hdl.handle.net/2027/uiug.30112007837674
Public Domain, Google-digitized / http://www.hathitrust.org/access_use#pd-google
Digitized by Google
Original from UNIVERSITY OF ILLINOIS AT URBANA-CHAMPAIGN

This is the spirit of improvidence that keeps the men down. Some drillers own automobiles, not small runabouts either, and drive them when going to work. Motorcycles are common, large numbers being sold at $225 to $275. When a show comes to town charging an admission price of $1.50 to $2, the seats are filled with workingmen. Edison phonographs and victrolas find ready purchasers. The town is a mecca for real estate men, who find a ready market for their lands. Oakland and Richmond city lots, irrigation projects in Fresno county, apple orchards in Washington, and automobile factory stocks, have all found a ready sale. Newspaper subscription men, book agents, jewelry peddlers, indeed anyone with something to sell, seeks the field knowing he will find plenty of purchasers eager to give up their money. Mining and oil stocks are no exception to the rule. Many of the men hold stock in local oil companies, some paying dividends, others worthless. The hope of striking it rich lures all, and each one gladly accepts a chance to get in on the 'ground floor.' The oilmen have always an expectation of bettering their conditions. Men who had nothing have suddenly gained fortunes. This conduces to democracy. For this reason, too, unions will not thrive here, for a time at least. The machinists are generally union men from the large cities, and there are several local unions of waiters, bartenders, and others, in the town, but not in the fields. On the whole, unions could accomplish little for the men. In time they may find a place, but for the present the workingman sees no need of them.

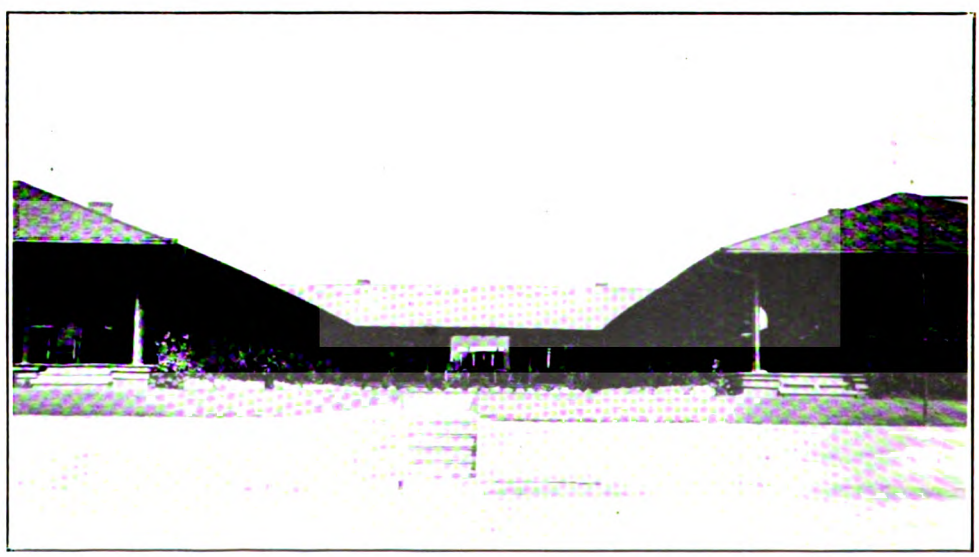

EXECUTIVE QUARTERS AND CLUB-HOUSE, CALIFORNIA, LIMITED.

Generated on 2024-09-29 23:48 GMT / https://hdl.handle.net/2027/uiug.30112007837674
Public Domain, Google-digitized / http://www.hathitrust.org/access_use#pd-google
Digitized by Google
Original from UNIVERSITY OF ILLINOIS AT URBANA-CHAMPAIGN

Irrigation in Northeastern Brazil*

By G. A. WARING

INFORMATION that has already been collected concerning the water-supply and the agricultural possibilities of northeastern Brazil has allowed the formation of general plans for the construction of storage and irrigation works. The area that suffers most from droughts is approximately bounded by two large perennial streams, Rio Parnahyba on the west or northwest, and Rio São Francisco on the south; although a large area in the state of Bahia south of Rio São Francisco also suffers. The region that lies between the basins of these two rivers may be divided into four other river basins, those of Pios Jaguaribe, Mossoró, Assú, and Parahyba, while the lower portions of these basins are separated by areas that are drained by minor coastal streams. All of these minor river basins have streams of only intermittent flow. In the state of Bahia south of Rio São Francisco the basin of the perennial stream, Rio Paraguassú, also contains irrigable land that has been examined by the Inspectoria. In the following paragraphs the coastal areas and the several river basins will be considered individually, with regard to the projects within them.

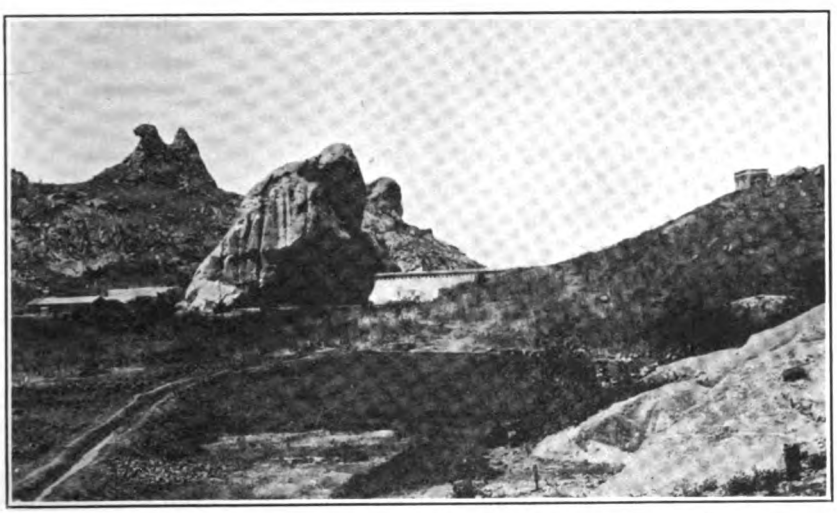

THE QUIXADA DAM IN THE STATE OF CEARA, BRAZIL.

Coastal Drainage.—The two large reservoirs of Quixadá and Acarahú-Mirim, which have been described, were constructed before general studies of the region had been made, and they

*Concluded from May number.

Generated on 2024-09-29 23:45 GMT / https://hdl.handle.net/2027/uiug.30112007837674
Public Domain, Google-digitized / http://www.hathitrust.org/access_use#pd-google
Digitized by Google
Original from UNIVERSITY OF ILLINOIS AT URBANA-CHAMPAIGN

were built without relation to a definite plan of development, though they are situated in localities where great need for water was felt during times of drought.

A third reservoir, known as Acarape, was projected in northern Ceará, before the organization of the Inspectoria de Obras Contra as Seccas, the federal bureau that now has charge of the work and of which M. A. R. Lisboa is director. Its construction is being continued, but, like reservoirs Quixadá and Acarahú-Mirim, it is intended to act mainly as a reserve supply, and as a 'protective' work against famine. The dam will be of masonry, 1030 ft. long and 108 ft. maximum height, giving a storage capacity of 38,000 acre-feet. Irrigation will be provided for by means of canals heading at diversion weirs in the river channel.

Reservoir Aracá is projected on a stream that will give it a plentiful supply and allow the irrigation of 300 acres or more, besides keeping sufficient water in reserve for periods of drought. It is near the railroad, so that an outlet for produce is near at hand. Reservoir Tucunduba is one of the large works proposed by the Inspectoria, having a capacity of 25,100 acre-feet. It is considered to be an economical and efficient project, for it will be able to irrigate about 2000 acres besides reserving a storage supply against dry years. As it is only about 15 miles from the railroad, an easy outlet for produce is available. Reservoir Varzea da Volta is planned to yield a considerable area of irrigable land in its basin as the water recedes during the summers, as well as to furnish water for about 500 acres down-stream. It is in a region that has a railroad outlet, and offers good chances for agriculture and stock raising. Reservoir São Pedro Timbauba is under construction, and will have a capacity of 15,600 acre-feet. It has an ample drainage basin to supply this amount, as it is situated on one of the larger coastal streams of northwestern Ceará. It is estimated that about 1500 acres below the dam can be irrigated, and the reservoir will also furnish a large permanent water-supply for local use. Construction was begun on this project early in 1911.

Reservoir Salão is being constructed (September 1911) on the upper course of one of the northern coastal streams. It will have a capacity of 4350 acre-feet, and is expected to irrigate about 500 acres besides yielding a considerable area of cultivable land in its basin, and serving as a water-supply for the people and cattle of the locality. Reservoir Pedra Branca offers another good storage basin near Reservoir Salão, but it can conveniently supply only a small irrigable area, and hence its construction has been deferred and preference given to the larger site at Salão. Reservoir Alto da Serrinha is a relatively small project the construction of which has been approved (September 1911), to be carried on by the state or by private enterprise. The site is near the coastal city of Fortaleza, where produce can be easily marketed. Reservoir Varzea Cercada is a project in the arid portion of the coastal zone of Rio Grande do Norte. A storage capacity of 7900 acre-feet has been planned, but the reservoir will serve mainly as a reserve supply, though it is estimated that 300 acres of cultivable land in the basin will become annually available as the water recedes during the summers.

Parnahyba Basin.—The basin of Rio Parnahyba comprises practically the whole of the state of Piauhy and portions of the adjoining states of Maran-

Generated on 2024-09-29 23:41 GMT / https://hdl.handle.net/2027/uiug.30112007837674
Public Domain, Google-digitized / http://www.hathitrust.org/access_use#pd-google
Digitized by Google
Original from UNIVERSITY OF ILLINOIS AT URBANA-CHAMPAIGN

hão and Ceará. The eastern part of the basin lies within the arid region, but to the west the rainfall is more plentiful and is more evenly distributed throughout the year. River steamers navigate the stream all the year from its mouth to Amarante, about 300 miles above its mouth, though during periods

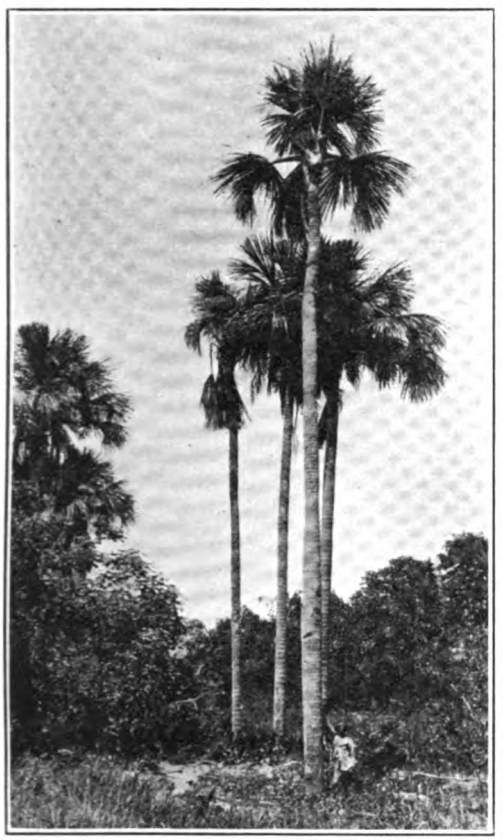

WAX PALMS GROWING WILD IN THE SEMI-ARID REGION OF THE INTERIOR OF NORTHEASTERN BRAZIL.

of low water boats that draw only 30 inches have trouble in passing many sandy shallows. From Therezina, which is the principal city on its banks, down-stream to its delta, a distance of 200 miles, the river channel has a width of 600 to 1200 ft. A discharge measurement that was made at Therezina with Price current-meter, in February 1911, when the river was at a medium stage, showed a flow of about 15,000 second-feet. Computations based on this measurement and the slope of the stream indicate that during high floods it may discharge 50,000 second-feet, while in its lowest stage it discharges about 7000 second-feet. Down-stream from Therezina there is much alluvial land on each side of the river. In a few places along it, cotton, rice, sugar cane, and other suitable crops are profitably grown; but the lands are not naturally irrigated by overflow from the river during floods to a sufficient extent to be cultivable, and the scanty native population is too poor to undertake the construction of irrigation works.

The river channel has an elevation of only about 150 ft. at Therezina, and thence to the ocean its grade is so low that gravity canals are impracticable. Farther up-stream there are several rapids, and it has been suggested for many years that diversion weirs for canals could be made at them. It is doubtful if such a project would be feasible, however, because of the generally low grade of the stream and the consequent great length and expense of canals in order to reach irrigable lands. It is probable, however, that pumping plants can be efficiently used along the river, or that shallow wells for irrigation can be sunk in the alluvial land near the river. Experimental work of this kind will probably be taken up by the Inspectoria, because the soil and climate are well adapted to agriculture, and an easy outlet to market is furnished by the river and ocean steamers.

Rio Poty, which drains the eastern portion of the Parnahyba basin, flows westward from Ceará into Piauhy through a long wide canyon. The

Generated on 2024-09-29 23:43 GMT / https://hdl.handle.net/2027/uiug.30112007837674
Public Domain, Google-digitized / http://www.hathitrust.org/access_use#pd-google
Digitized by Google
Original from UNIVERSITY OF ILLINOIS AT URBANA-CHAMPAIGN

drainage basin above the canyon is large, and there is much irrigable land along the lower course of the stream. It has, therefore, been considered that the canyon offers a good opportunity for the storage of water for irrigation. A good site has not yet been found in the canyon, but detailed examination may show that the project is feasible. A reservoir that will have a capacity of 3800 acre-feet is under construction (September 1911) by the Inspectoria in the upper part of the Parnahyba basin, near São Raymundo Nonnato; but other development works in the basin have not yet been undertaken. This is due largely to the fact that the region is sparsely inhabited and there has not been great need for federal aid in securing permanent water supplies. There is much land in this portion of the basin that is suitable for cattle raising, however, and this industry can be greatly developed by means of the construction of storage reservoirs and the culture of sufficient forage to tide over the periods of drought.

Jaguaribe Basin.—The basin of Rio Jaguaribe occupies about one-half of the state of Ceará, and has an area of 30,000 square miles; but even in its lower portion the river channel is usually dry during most of the year. Extensive, flat, alluvial areas a few miles in width border the lower part of its course, and there are also several large alluvial areas farther up-stream. Only a small part of the land is cultivated, because of the lack of people, and because water is too far below the surface to ensure good crops without irrigation.

Reservoir Santo Antonio de Russas is being constructed (September 1911), on a tributary to the lower course of Rio Jaguaribe. This reservoir will not be able to furnish water to lands in the lower Jaguaribe valley because the stream on which it is situated joins the Jaguaribe near its mouth; but there are about 1000 acres below the dam which can be easily irrigated, and it is estimated that nearly an equal area will become available during the summers for the cultivation of quickly growing crops in the basin of the reservoir. The storage capacity will be 22,700 acre-feet, but the drainage basin may not be able to supply more than one-half of this amount during winters of average rainfall. On the upper course of the Jaguaribe and on its tributaries there are several reservoir sites that are being studied by the Inspectoria, and the construction of dams at the principal ones will probably be undertaken soon; for although the Jaguaribe basin contains some of the driest portions of the arid region, it offers good opportunities for development, because of its available reservoir sites and irrigable areas.

The principal reservoir sites in the Jaguaribe basin are those of Boqueirão do Mundobim, Riacho do Sangue, Orós, and Lavras. Reservoirs at these four places will conserve the greater part of the winter run-off for the summer irrigation of the lower lands. All of these reservoir sites have large drainage basins and are therefore capable of storing large amounts of water. Only the storage site of Lavras has been studied as yet (September 1911). This site is remarkable for the fact that the river crosses a line of hills through a rocky gorge with nearly vertical walls less than 200 ft. apart. It has been estimated that a dam 130 ft. high would give a storage capacity of 1,200,000 acre-feet; but as the river can by no means supply such a large amount, a dam 100 ft. high, giving one-half the storage capacity, has been suggested.

Generated on 2024-09-29 23:42 GMT / https://hdl.handle.net/2027/uiug.30112007837674
Public Domain, Google-digitized / http://www.hathitrust.org/access_use#pd-google
Digitized by Google
Original from UNIVERSITY OF ILLINOIS AT URBANA-CHAMPAIGN

The site has been studied in detail by the Inspectoria, and it is probable that a dam giving a capacity of not more than 400,000 acre-feet will be decided upon as being sufficiently high, for during the winter of 1910-11, which was one of probably somewhat more than average rainfall, the river discharged only about 225,000 acre-feet at the dam-site. There are other large reservoir-sites farther up-stream on the tributaries, at the places known as Quixeramobim, Patú, Serafim Dias, Exú, Carius, and Arneiroz. Most of these sites have not yet been studied in detail, and two or three will probably not be advisable if others are made farther down-stream, but some of them will serve for local use, and will also be of value as auxiliaries to the lower storage reservoirs.

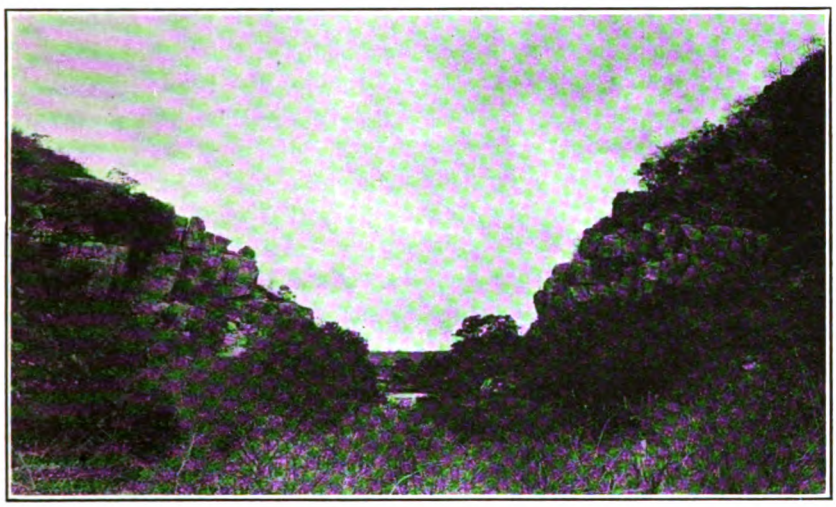

CHARACTERISTIC VEGETATION OF THE SEMI-ARID INTERIOR OF BRAZIL DURING THE DRY SEASON. DAM-SITE ON A RIVER.

An illustration of the need of great storage reservoirs in order to conserve the run-off of wet winters is given by the fact that during the winters of 1900-1901 and 1902-1903, and also during the two successive winters of 1906-1908, Rio Quixeramobim did not flow at all past the city of the same name, though its basin above Quixeramobim comprises 2700 square miles. It is because of this great irregularity in the run-off that, at sites where it is possible to do so, the depth and capacity of reservoirs have been planned so that when full they will be capable of supplying the demands of irrigation and the losses by evaporation for more than one year of no rainfall.

Mossoró Basin.—Rio Mossoró drains the western portion of the state of Rio Grande do Norte. Near the centre of the basin there is a flat alluvial overflow area of perhaps 40 square miles, beside the river, and farther down-stream other areas along the main river and its tributary, Rio Upanema, also furnish irrigable lands of good quality. These areas can be best supplied with water for irrigation by the construction of storage reservoirs on the upper courses of the streams and canals heading at diversion weirs across the stream channels above the irrigable areas. Reservoir sites that will partly serve the purpose of conserving water for the

Generated on 2024-09-29 23:41 GMT / https://hdl.handle.net/2027/uiug.30112007837674
Public Domain, Google-digitized / http://www.hathitrust.org/access_use#pd-google
Digitized by Google
Original from UNIVERSITY OF ILLINOIS AT URBANA-CHAMPAIGN

summer irrigation of the lowlands are those of Taboleiro Grande which has been studied, Santo Antonio Caraubas which is projected, Curraes and Corredor which are being constructed (September 1911), and Sant' Anna Pau dos Ferros which was constructed in 1908.

Sites for the construction of reservoirs that will better serve for the irrigation of the lowlands of Rio Mossoró still remain to be found, because the proposed Reservoir Taboleiro Grande would submerge a large part of the irrigable land in that locality, Reservoir Santo Antonio Caraubas has too small a hydrographic basin to allow it to furnish much water for irrigation each year, Reservoir Curraes is intended only as a water-supply for local use, without irrigation, and the surplus water from reservoirs Corredor and Sant' Anna can be employed on lands immediately below them.

During the winter of 1910-11 Rio Mossoró discharged about 270,000 acre-feet of water at a gauging station at the lower border of the main irrigable area; but the station record shows that the flow consisted mainly of one large flood of about three weeks' duration. It is said that during the winter of 1902-1903 the river did not flow at all in its lower portion.

Assú Basin.—The Basin of Rio Assú comprises the western half of the state of Parahyba and central portion of Rio Grande do Norte. The main stream has a length of about 250 miles, but, like most of the other streams of the northeast, its channel is dry during the greater part of the year. Within this basin there are two large areas of irrigable land, that of the lower Rio Assú valley and that of the valley of Rio do Peixe. For the storage of water to irrigate a portion of the latter area, there is a good reservoir site on Rio de Piranhas at a short canyon known as Boqueirão de Piranhas, while about 15 miles downstream a diversion weir across the river channel a short distance above the valley edge can furnish a place for canal headings. It is estimated that there are about 25,000 acres of irrigable land in the valley of Rio do Peixe. Rio de Piranhas discharged about 360,000 acre-feet of water at the reservoir site during the winter of 1910-11, which is believed to have been one of somewhat more than the average rainfall.

Besides the reservoir site at Boqueirão de Piranhas there are five others, at the localities known as Mai d'Agua, Curema, Boqueirão de Seridó, Zangarelha and Gargalheira, which will be of great importance in the development of the irrigable land in the lower portion of the Assú basin. Reservoirs at these places will also be of great value in the development of the upper portions of the basin; for during the summer water will be turned into the river channels from these reservoirs, and taken out for irrigation by means of diversion weirs in the lower courses of the streams. By this means the river channels will be rendered nearly perennial in flow, and it is believed that this fact, combined with the prevention of serious floods, will add considerably to the increase in minor agriculture along the rivers, and in cattle raising in the grazing regions of the upper part of the basin. The reservoir sites at Mai d'Agua and at Curema are on tributaries of Rio de Piranhas, which are know respectively as Rio Aguiar and Rio Piancó. The sites were being surveyed in September 1911. During the winter of 1910-1911 Rio Piancó discharged about 220,000 acre-feet of water at Curema, but the rainfall of this season was probably somewhat

Generated on 2024-09-29 23:45 GMT / https://hdl.handle.net/2027/uiug.30112007837674
Public Domain, Google-digitized / http://www.hathitrust.org/access_use#pd-google
Digitized by Google
Original from UNIVERSITY OF ILLINOIS AT URBANA-CHAMPAIGN

more than the average, in this river basin. At both of the sites Mai d'Agua and Curema there are narrow rocky sites that will require only short dams, and good storage basins that will permit the storage of the entire flow of a winter. Studies of the site on Rio Serido have not yet (September 1911) been undertaken, but like the two preceding sites, it has a narrow rocky dam-site and a good storage basin above. Reservoir Zangarelha has been projected and offers a good place for the storage of the river flow. It would yield considerable cultivable land within the basin and could irrigate several small cultivable areas that border the river below the dam-site. Reservoir Gargalheira has been projected with an overflow dam of cyclopean rubble, 65 ft. high, forming a reservoir with a capacity of 20,600 acre-feet. During the winter of 1910-1911, which was one of scanty rainfall in this portion of the Assú basin, 33,000 acre-feet was discharged at the dam-site, so that plans for a dam 82 ft. high, which will give a capacity of 60,500 acre-feet, may be adopted.

Besides the sites in the Assú basin that have been already mentioned, three minor sites are under consideration by the Inspectoria. These are Reservoir Cruzeta with a proposed capacity of 13,000 acre-feet, Mundo Novo of 2900 acre-feet, and Barra do Mainosa, which in September 1911 had not yet been surveyed.

Parahyba Basin.—The basin of Rio Parahyba occupies a central position of the state of the same name, and while it includes a considerable area, its stream channels are dry during most of the year. There is no extensive area of cultivable land in the basin, but there is probably opportunity for considerable irrigation in its lower portion, and a reservoir site at Boqueirão de Cabaceiras offers a place for the storage of a large amount of water. Besides this site, the attention of the Inspectoria has been turned to the project of Soledade, in the northern part of the basin, with a capacity of 26,000 acre-feet, and of a minor storage reservoir, Bodocongó, with a capacity of 1120 acre-feet. It is probable that submerged dams will be construct-

CHARACTERISTIC SCENERY AND BOAT OF THE RIO SAO FRANCISCO.

Generated on 2024-09-29 23:47 GMT / https://hdl.handle.net/2027/uiug.30112007837674
Public Domain, Google-digitized / http://www.hathitrust.org/access_use#pd-google
Digitized by Google
Original from UNIVERSITY OF ILLINOIS AT URBANA-CHAMPAIGN

ed in the channel of Rio Taperoá, near the city of the same name, about 25 miles southwest of Soledade; and these should be of local value in furnishing a better domestic supply and in raising the water-plane in the cultivable river-lands.

São Francisco Basin.—The largest stream in northwestern Brazil is Rio São Francisco. This great river heads in the mountains north of Rio de Janeiro and drains northward parallel to the coast for more than 800 miles, then swings coastward and follows a southeasterly course of 250 miles to the ocean. Along the central portion of its course there are extensive areas of alluvial land; and because of this and the facts that the river carries a large amount of water and has a fairly regular flood period, it has been often likened to the lower Nile. The cultivable land along Rio São Francisco differs from that of the Nile, however, for instead of being delta or low valley land, it forms part of a plateau area about 1200 ft. in elevation; and while the river overflows part of the adjacent land during high-water stages, it does so mainly through side channels that supply shallow lagoons, and it does not render much land adaptable for planting.

The land that is at present cultivated consists of narrow strips along the margins of the main channels, and of low sandy islands that appear as the water subsides. It has long been considered that much of the land is capable of irrigation by gravity canals from the river. This is probably not feasible, however, because of the low grade of the river in this portion (about 1 to 7000), the great width of the channel (½ to 1 mile), and its considerable variation in level (perhaps 12 to 20 ft.), at possible sites for diversion weirs. Like the land along Rio Parnahyba in Piauhy, however, that along Rio São Francisco is susceptible of irrigation by pumps, and studies along this line have been made.

The principal project that is under consideration in the São Francisco basin by the Inspectoria is that at the place called Boqueirão, a short distance below the junction of Rio Grande and Rio Preto, and about 50 miles above the junction of Rio Grande with the São Francisco. A good site for a diversion weir to supply canals is here available, and there is much rich land on each side of the stream below that can be irrigated. In June 1911, at a low stage of the river, it was discharging 7750 second-feet of water, so that only a small part of the flow will be needed to supply canals.

Paraguassú Basin.—Rio Paraguassú receives its principal supply from mountains in the central part of the state of Bahia, and flows in a general easterly course to tidewater near the city of Bahia. Although it flows for most of its course through an arid region, its mountain tributaries render it perennial in flow, and it furnishes available water for irrigating lands. A site at the place called Caixão has been studied by the Inspectoria with respect to the irrigation of land bordering the river farther down-stream; but on account of the high cost of the proposed storage and diversion dam and canals, and the rocky nature of much of the land, the further study of the project has been deferred. Several rapids in the river make it possible to take out gravity canals by means of small diversion weirs, however. In April 1911 the river was discharging about 3500 second-feet, but in stages of low water the flow may be decreased to about 1000 second-feet.

Generated on 2024-09-29 23:47 GMT / https://hdl.handle.net/2027/uiug.30112007837674
Public Domain, Google-digitized / http://www.hathitrust.org/access_use#pd-google
Digitized by Google
Original from UNIVERSITY OF ILLINOIS AT URBANA-CHAMPAIGN

Although reclamation work in Brazil is as yet in the formative stage and the service of the Inspectoria thus far has consisted largely of surveys and studies of the water resources, these preliminary studies have already pro-

RESERVOIRS BUILT OR PROPOSED IN NORTHEASTERN BRAZIL

Name.	Status.	Capacity, Acre-feet	Max. Height of Dam, Feet	Length on Top, Feet	Material.
Lavras	Projected	600,000	100	200	masonry
Quixadá	Constructed	111,450	51	1360	masonry*
			56	800	earth*
Gargalheira	Projected	60,500	82	395	masonry
		20,600	65	300	overflow†
Acarahú-Mirim	Constructed	48,600	59	1450	earth
Acarape	In construction.	38,000	108	1030	masonry
Tucunduba	Projected	25,100	52	1150	earth
Santo Antonio de Russas	In construction.	22,700	43	2030	earth
Soledade	Projected	26,000	25	1450	earth
Serafim Dias	Projected	21,900	66	950	masonry overflow
Lagoa das Pombas	Constructed	16,200	20	790	earth
São Pedro Timbauba	In construction.	15,600	46	1820	earth
Cruzeta	Projected	13,000	39	1670	earth
Santo Antonio Caraubas	Projected	9,000	33	1900	earth
Varzea Cercada	Projected	7,900	33	1020	earth
Sant' Anna Pau dos Ferros.	Constructed; to be increased to	5,670	39	920	earth
Aracá	Projected	5,650	44	485	masonry core
Varzea de Volta	Projected	5,600	30	670	earth
Breguedoff	Constructed	5,100	26	380	earth
Salao	In construction.	4,350	43	1035	earth
Zangarelha	Projected	4,200	36	490	masonry
Pedra Branca	Projected	3,850	44	910	earth
São Raymundo Nonnato	In construction.	3,800	..	..	earth
Corredor	In construction.	3,300	28	820	earth
Curraes	In construction.	3,250	35	1020	earth
Mundo Novo	Projected	2,900	33	400	masonry core
Alto da Serrinha	Projected	1,670	33	1400	earth
São Miguel Uruburetama	Constructed	1,140	39	560	earth
Bodocongó	Projected	1,120	48	490	earth

*Two principal dams. †Two projects.

NOTABLE RESERVOIRS IN OTHER COUNTRIES

Name.	Capacity, Acre-feet	Max. Height of Dam, Feet	Length on Top, Feet	Material.
Roosevelt, Arizona	1,284,000	280	1080	masonry
Shoshone, Wyoming	456,000	325	200	masonry
Bhatgur, India	126,500	127	4067	masonry
Betwa, India	54,300	61	4300	masonry
Bear Valley, California	40,550	64	300	masonry
Sweetwater, California	22,570	95	380	masonry
Merced, California	15,000	54	4000	earth
East Canyon Creek, Utah	5,700	68	100	loose rock with steel core
Furens, France	1,300	184	326	masonry

Generated on 2024-09-29 23:45 GMT / https://hdl.handle.net/2027/uiug.30112007837674
Public Domain, Google-digitized / http://www.hathitrust.org/access_use#pd-google
Digitized by Google
Original from UNIVERSITY OF ILLINOIS AT URBANA-CHAMPAIGN

gressed so far that the principal works which are desirable are now known.

A list of the main projects that have been studied in detail is given ahead. It will be noticed that most of the reservoir sites in northeastern Brazil will have considerably lower dams than well known reservoirs of approximately equal capacities in other parts of the world. This fact is due largely to the wide shallow character of the storage basins in this plateau area. Its favorable feature of low cost of construction will be partly offset, however, by the great evaporation that will take place from the large surfaces of the reservoirs. No experimental measurements of the evaporation in this region are available, but it is probably six or seven feet annually. This amount of loss will be a large part of the capacity of the shallower reservoirs.

A number of the reservoirs projected in Brazil will not be financially successful, because they are intended only to hold storage supplies in readiness against droughts, and several of the irrigation projects probably also will not yield much revenue. These works are needed, however, in order to ensure permanent settlement of certain portions, and indirectly their cost will be amply repaid in the general development of the region. Much of the land is suitable only for stock range, and even for this purpose it should be supplemented by areas where forage crops are grown; but there is also much land that, as is true of other arid regions, is capable of great agricultural development. The native population is scanty, and active development by these people alone may be slow; but when the irrigation projects are completed and the outside world realizes that it is a healthful arid climate that it is invited to, and not a tropical one, immigration should rapidly aid in developing the lands. In this respect the work of the Inspectoria is the reverse of that of the U. S. Reclamation Service; for, in Brazil, instead of there being a large population ready to move into new areas as soon as water is supplied to the land, the irrigation projects must be first made and then the present population taught to make use of them and immigration invited.

UNLOADING BOAT ON THE RIO SAO FRANCISCO, STATE OF BAHIA, BRAZIL.

Generated on 2024-09-29 23:41 GMT / https://hdl.handle.net/2027/uiug.30112007837674
Public Domain, Google-digitized / http://www.hathitrust.org/access_use#pd-google
Digitized by Google
Original from UNIVERSITY OF ILLINOIS AT URBANA-CHAMPAIGN

An Investigation of Stresses in Arched Dams

By F. A. POST-NIKOV*

THE design and erection of dams has become one of the most important branches of modern hydraulic engineering, by reason of the great demand for water storage, both for municipal water-supply and power. In dam construction the requirements of efficiency, economy, and safety are more essential than in any other class of engineering construction, on account of the enormous cost of construction itself which very often amounts to several millions of dollars for a single dam, and the terrible consequences of failure or collapse through structural weakness or defects. There are many examples where failure of a dam swept from the face of the earth an entire city. Destruction of the Austin dam, last year, emphasizes the danger.

The scope of this article prevents my discussing the evolution of the forms of dams and how the inclined multiple arched dam finally came into existance. In this type the stability is attained not by counter-balancing the water-pressure with an excess of materials, but by use of water-pressure itself, changing the direction of that pressure from horizontal to inclined, the strength being greatly increased by the distribution of material in such a manner that no part of the dam is in tension. Thus the designer has to deal with resistance of materials to compression only, so that concrete as material may be used about ten times more economically than it could under a tensile stress.

This explains why the arched dam, and particularly the multiple arch types, may now be considered as the most scientific type of construction known. Up to the present day there has been no explanation of the real phenomena of the distribution of stresses in an arch, and there is no suitable formula for defining the stresses produced in different parts of an arch under uniform load normal to the extrados. The formula given in the engineering handbooks and even in the writings of world-renowned specialists (such as Mr. Wegman, Mr. Wade, and others) can be applied only in cases where arches are comparatively thin and a very liberal coefficient of safety is assumed. In short, at present the stability and strength of the dam is governed by the personal opinion of the constructor and some precedents in his practice, and as a result the dam may be made unnecessarily strong and consequently very expensive, or going to the other extreme, the computations may be made according to an incorrect formula, resulting in failure of the dam, ruining the career of the engineer in charge, and endangering the property and lives of the community served.

*Civil Engineer, Hearst Bdg., San Francisco.

Generated on 2024-09-29 23:42 GMT / https://hdl.handle.net/2027/uiug.30112007837674
Public Domain, Google-digitized / http://www.hathitrust.org/access_use#pd-google
Digitized by Google
Original from UNIVERSITY OF ILLINOIS AT URBANA-CHAMPAIGN

Several attempts have been made recently to solve the problem scientifically (see *Trans.* Am. Soc. Civ. Eng., the discussion of the Halligan dam, and also the article by Professor Burr in the *School of Mines Quarterly*, January 1912), and it seems that now is a proper time for every engineer who is interested, to make public the results of his experience, in order that a true solution of the problem may be found.

While the main object of this article is to determine the stresses in the wall of an inclined arch in a multiple

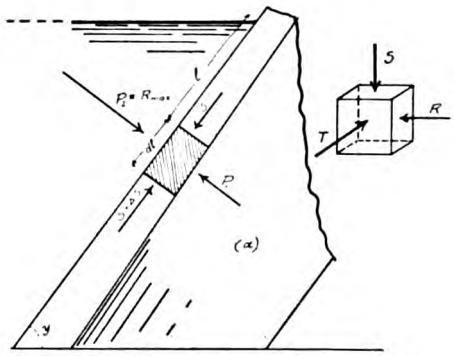

FIG. 1

arch dam, Eastwood type, the subject is treated in such a general way that the formulas and method itself can be applied to any circular arch, under radial, evenly distributed load, such as water, steam, or air pressure, no matter from which side of the arch it acts (from extrados or intrados). The result of this investigation, therefore, can be applied to the tunnel under water as well as to the water conduit, or to the bore of a gun under pressure of explosion. For instance, the formula of Mr. Lamé (1833), used to determine the stresses in pipes under steam pressure, and the Clavarino formula (1880), used for the computation of the stresses in field guns, can be considered as particular applications of my general formula (compare the formula 5 bis with that of Lamé given on page 387, Merriman's 'Mechanics of Materials').

In the formulae following, the denotation is:

r_1—radius of intrados of an arch
r_2—radius of extrados of an arch
l—length of slope
P_1—pressure on intrados
P_2—pressure on extrados or water
L—length of the arch
c—span
C—allowable stress for given material
y—angles between slope of extrados surface and horizontal line
h—height of the dam or depth of water
S—stress along the slope line of extrados
R—radial stress
T—tangential stress
E—coefficient of the elasticity
Θ—coefficient of secondary stress, or factor of lateral contraction
t—thickness of the arch wall
w—weight of the element

(All magnitudes are expressed in feet and tons.)

All modern constructors of dams use for determination of the strength of materials in circular arches the formula

$$T = \frac{phr_2}{t} \text{ or } \frac{P_2 r_2}{t} \qquad (1)$$

and hence for the thickness of the arch

$$t = \frac{phr_2}{C} \text{ or } \frac{P_2 r_2}{t} \qquad (1 \text{ bis})$$

This shows that the thickness of the arch is in direct proportion to the depth, and the radius of the arch annulus under consideration. This formula is absolutely true for infinitely thin arches under perfectly normally distributed loads, and is practically correct for use in very thin arches of a comparatively small radius, but in

Generated on 2024-09-29 23:41 GMT / https://hdl.handle.net/2027/uiug.30112007837674
Public Domain, Google-digitized / http://www.hathitrust.org/access_use#pd-google
Digitized by Google
Original from UNIVERSITY OF ILLINOIS AT URBANA-CHAMPAIGN

thick arches, whose thickness is computed according to the above formula, the maximum actual stress near the intrados can greatly exceed the assumed safe strength of materials; the higher and more important the dam the more striking this fact should be. Let us take an element (Fig. 1) of an arch at the depth, h, or at the distance, l, along the slope. This element being limited by two vertical planes, parallel to the radius of the arch and one foot distant one from another, and two other planes drawn normal to the slope of the extrados at a distance, dl, from one another. The forces acting upon that element are:

1. Water-pressure—P
2. Weight of element itself—w
3. Tangential stress or the reaction of adjacent elements—T

We know from mechanics, that the dependence between three co-ordinate forces acting upon a certain element can be expressed by the following equation of elongation

$$e = \frac{T'}{E} = \frac{(S - \theta T - \theta R)}{E} \qquad (2)$$

where, e, is the elongation, T, the resultant, and the rest of the letters as per denotation. In our case, the elongation, or the change of the length of the slope and the pressure parallel to it at a certain depth are both constant, therefore we can write:

$$\begin{aligned} \theta T + \theta R &= \text{Constant} \\ T + R &= \text{Constant} = 2C' \end{aligned} \qquad (3)$$

This will be the first equation to determine the magnitude of, T, and, R. The second equation for this problem can be derived in the following manner:

Let us take an annulus of the thickness, dx (Fig. 2). The radial pressure for one unit of length in a direction normal to the diameter and parallel to the slope is

$$Rx \text{ when radius} = x$$

and $(R + dR).(x + dx)$ when radius $= (x + dx)$.

The difference between the two magnitudes above will give the differential increase of the radial pressure, which, if multiplied on the second expression and omitting the second powers of the infinitely small magnitudes is equal to

$$(xdR + Rdx)$$

At the same time the differential increase of the tangential stress is equal to $-Tdx$.

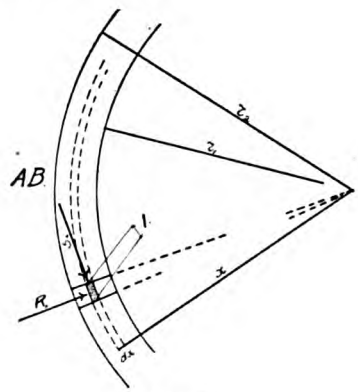

FIG. 2

We know that the sum $(T + R)$ is constant, hence the increase of one of them must be exactly equal to the decrease of the other. Thus

$$(xdR + Rdx) = Tdx \qquad (4)$$

This is the second equation between unit stress, T, and, R. By inserting $(2C^1 - R)$ for T (see 3)

$$xdR + Rdx = (2C_1 - R)dx$$

or

$$xdR = -2dx\,(R - C_1)$$

dividing both parts of the equation by $x(R - C_1)$ gives

$$\frac{dR}{R - C_1} = -2\,\frac{dx}{x}$$

but we know that $dR = d(R - C_1)$ be-

Generated on 2024-09-29 23:43 GMT / https://hdl.handle.net/2027/uiug.30112007837674
Public Domain, Google-digitized / http://www.hathitrust.org/access_use#pd-google
Digitized by Google
Original from UNIVERSITY OF ILLINOIS AT URBANA-CHAMPAIGN

cause the differential of a constant always equals zero; hence

$$\frac{d(R-C_1)}{(R-C_1)} = -2\frac{dx}{x}$$

and

$$\int \frac{d(R-C_1)}{(R-C_1)} = \int -2\frac{dx}{x} = -2\int \frac{dx}{x}$$

from which

$$\log(R-C_1) + \log C_2 = -\log x^2$$

where C_2 is the constant of integration.

From the theory of logarithms we know that the last equation is the equivalent of

$$\log(R-C_1)C_2 = \log \frac{1}{x^2}$$

and it shows that

$$(R-C_1)C_2 = \frac{1}{x^2}$$

Hence

$$R = C_1 + \frac{C_2}{x^2}$$

and by substituting this value of, R, in equation (3)

$$T = C_1 - \frac{C_2}{x^2}$$

To find C_1 and C_2 let us regard the limiting value of $X = r_1$ for intrados and $X = r_2$ for extrados, and the pressure at those points as P_1 and P_2 respectively.

By doing this we find when

$$P_1 = C_1 + \frac{C_2}{r_1^2}$$

$$P_2 = C_1 + \frac{C_2}{r_2^2}$$

By subtracting the first equation from the second we have

$$P_2 - P_1 = C_2\left(\frac{1}{r_2^2} - \frac{1}{r_1^2}\right) = \frac{C_2(r_1^2 - r_2^2)}{r_1^2 r_2^2}$$

and hence

$$C_2 = \frac{(P_2 - P_1)r_1^2 r_2^2}{(r_1^2 - r_2^2)}$$

By substituting C_2, we have

$$P_2 = C_1 + \frac{(P_2 - P_1)r_1^2}{(r_1^2 - r_2^2)}$$

or

$$C_1 = -\left(\frac{P_2 r_2^2 - P_1 r_1^2}{r_1^2 - r_2^2}\right)$$

and substituting them in the formula (5), we have

$$T = \frac{\left[r_1^2 P_1 - r_2^2 P_2 + \frac{r_1^2 r_2^2}{x^2}(P_1 - P_2)\right]}{r_2^2 - r_1^2} \qquad (5)$$

$$R = \frac{\left[r_1^2 P_2 - r_2^2 P_2 - \frac{r_1^2 r_2^2}{x^2}(P_1 - P_2)\right]}{r_2^2 - r_1^2} \qquad (5 \text{ bis})$$

Thus, omitting the effect of the weight of the arch walls, we have come practically to the same formula which was given by Lamé for the stresses in pipe walls, under water or steam pressure from the inside.

Now let us take into consideration the weight of the arch itself (Fig. 3).

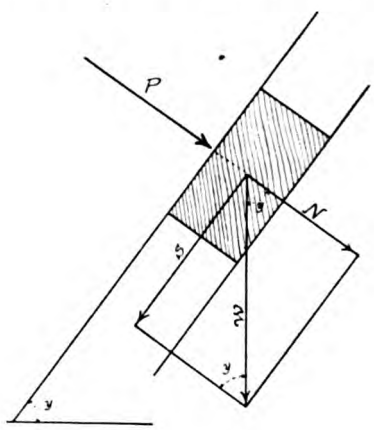

FIG. 3

The weight of the parallelopipedal element, abcd, is equal to its volume multiplied by the specific weight of the concrete of which the arch is to be constructed.

Thus:

$$w = v\ 0.075 \text{ where } 0.075$$

is the weight of one cubic foot of concrete in tons and

$$v = t \times dl \times l = tdl$$

hence

$$w = 0.075 + dl \qquad (6)$$

The resultant of the weight of the element can be substituted for two component forces: One, S, parallel to the slope, and another, N, normal to same.

Generated on 2024-09-29 23:55 GMT / https://hdl.handle.net/2027/uiug.30112007837674
Public Domain, Google-digitized / http://www.hathitrust.org/access_use#pd-google
Digitized by Google
Original from UNIVERSITY OF ILLINOIS AT URBANA-CHAMPAIGN

The normal component of the weight coincides, in its direction with water-pressure, and depends upon the same factor as the last one, consequently its magnitude should be added to the water-pressure and can be expressed in a percentage of the former. This magnitude is

$$N = w \cos y = (tdl)\, 0.075 \cos y \quad (7)$$

or in other words it is equal to the weight of water at a height

$$\frac{0.075}{0.03125} \cos y = 2.4 \cos y$$

multiplied by the respective thickness of the arch, but this thickness, as we have seen, is equal to

$$t = \frac{phr_2}{C}$$

hence the total height of the water in computation must be taken as equal to

$$h' = h\left[1 + \frac{2.4(0.03125\, r_2)\cos y}{C}\right] = h\left[1 + 0.075 \frac{r_2}{C} \cos y\right] \quad (8)$$

By doing this we eliminate the separate computations of the stresses produced by the normal component, and we have to investigate the effect of another component, s, alone. The stresses produced upon a unit of area of arch cross-section by this component of an element is equal to

$$S_{dl} = W \sin y \quad (9)$$

where

$$W = tdl \times 0.075$$
$$t = \frac{phr_2}{C}$$
$$dl = \frac{dh}{\sin y}$$

Substituting these magnitudes in the equation (9) we find

$$S_{dl} = \sin y\, tdl \times 0.075 = \frac{phr_2}{C} \times 0.075\, dh = \frac{0.00234\, r_2}{C} h\, dh \quad (10)$$

This formula represents the force of the pressure produced by one single element of the arch at a certain depth, h, but the true pressure is equal to the sum of the similar forces produced by all the elements lying above the element under consideration. Thus, to find the real pressure acting parallel to the slope of the section under consideration we must integrate the equation (10)

$$S_h = \int_0^h S_{dl} = 0.00234 \frac{r_2}{C} \int h\, dh = 0.00234 \frac{r_2}{C} \frac{h^2}{2}$$

Dividing the result by the area of the section $= t \times 1$ ft., we find that the unit stress of this section equals

$$S = \frac{S_h}{t} = \frac{S_h}{\left(\frac{phr_2}{C}\right)} = 0.075h \quad (11)$$

or in other words, the stress along the slope is **similar to water-pressure, but the specific weight taken is that of the concrete.**

Now we have the three apparent stresses acting along the three co-ordinate axes

$$R = \frac{\left[r_1^2 P_1 - r_2^2 P_2 - \frac{r_1^2 r_2^2}{\chi^2}(P_1 - P_2)\right]}{(r_2^2 - r_1^2)}$$
$$T = \frac{\left[r_1^2 P_1 - r_2^2 P_2 + \frac{r_1^2 r_2^2}{\chi^2}(P_1 - P_2)\right]}{(r_2^2 - r_1^2)} \quad (12)$$
$$S = -0.075h$$

where $P_2 = ph\left(1 + 0.075 \frac{r_2}{C} \cos y\right)$

or the height, h, is taken as about 5% larger than the real depth of the water. The formulas (12) usually can be simplified by taking into consideration that we have the water-pressure only on the extrados and none on the intrados. Thus, substituting $P_1 = 0$ we obtain

$$R = \frac{-\left[r_2^2 P_2\left(1 - \frac{r_1^2}{\chi^2}\right)\right]}{(r_2^2 - r_1^2)}$$
$$T = \frac{-\left[r_2^2 P_2\left(1 + \frac{r_1^2}{\chi^2}\right)\right]}{(r_2^2 - r_1^2)}$$
$$S = -0.075h$$

Generated on 2024-09-29 23:44 GMT / https://hdl.handle.net/2027/uiug.30112007837674
Public Domain, Google-digitized / http://www.hathitrust.org/access_use#pd-google
Digitized by Google
Original from UNIVERSITY OF ILLINOIS AT URBANA-CHAMPAIGN

Minus shows that they are all compression stresses and in further computations the negative sign is omitted.

The stress is the apparent tangential stress corresponding to the stress determined by the standard formula

$$T = \frac{PR}{t}$$

The difference is, that the last stress is supposed to be uniformly distributed and the former gives real distribution and shows that at the intrados the material is subjected to the maximum compression.

First Numerical Example

Suppose we have an inclined arch, with a radius of 13 ft. and covering a span of 24 ft. Let us find the real tangential stress at a depth of 100 ft. in an arch, whose thickness was determined by the formula $T = \frac{PR}{t}$ with an assumed safe compression of 18 tons. That is,

Given $r_2 = 13$ ft.
$c = 24$
$C = 18$
$h = 100$
$P_2 = ph = 3.125$ tons per sq. ft.

the thickness $t = \frac{3.125 \times 13}{18} = 2.25$ ft.

$r_1 = r_2 - t = 13 - 2.25 = 10.75$ ft.

Substituting the found values in formula (1 bis) we find

$$T = -\frac{[13^2 \times 3.125(1 + \frac{(10.75)^2}{x^2}]}{13^2 - (10.75)^2}$$

$$T = -9.88(1 + \frac{115.6}{x^2})$$

The formula shows the following value for T max. when $x = r_1$ and for T min. when $x = r_2$. Substituting $r_1 = 10.75$ and then $r_2 = 13$ for x we find

T max. = 19.76 tons per sq. ft.
and T min. = 16.65 tons per sq. ft.

These forces (12 bis) act simultaneously and the deflection produced by one in a given direction is affected by two others. To find the true tangential stress we must use the fundamental formulas of mechanics expressing that interdependence in the following manner:

$$\begin{aligned} T' &= T - \theta S' - \theta R \\ S' &= S - \theta T - \theta R \\ R' &= R - \theta T - \theta S \end{aligned} \qquad (13)$$

The greatest stress among them is the tangential T^1 which in the computations of modern engineering practice is taken as the only factor deciding the thickness of the arch. Let us determine that stress by substituting T, S, and R in equation (13), taking their value from the equation (12 bis).

$$T' = -\frac{2}{3}\left(\frac{r_2^2 P_2}{r_2^2 - r_1^2}\right)[1 + \frac{2r_1^2}{x^2}] + 0.025h \qquad (14)$$

It is readily seen from the formula that T^1 is maximum when $x = r_1$ and minimum when $x = r_2$. In other words, the maximum compression is again at the intrados and the minimum at the extrados.

Second Numerical Example

Let us determine the true tangential stress again for the same arch in the same depth of 100 feet.

Substituting the data from numerical example No. 1 in the equation (14) we find

$$T' = -\frac{2}{3}\left(\frac{169 \times 3.125}{169 - 116}\right)(1 + \frac{232}{x^2}) + 2.5$$

when $x = r_1$ $T_{max} = -19.9 + 2.5 = -17.4$ tons
$x = r_2$ $T_{min} = -13.2$ tons per sq. ft.

From the equations (12 bis) and (13) we receive the true forces: on each axis of the co-ordinate separately.

$$T_1 = -\frac{2}{3}\left(\frac{r_2^2 P_2}{r_2^2 - r_1^2}\right)[1 + \frac{2r_1^2}{x^2}] + 0.025h \qquad (14\text{ bis})$$

Generated on 2024-09-29 23:41 GMT / https://hdl.handle.net/2027/uiug.30112007837674
Public Domain, Google-digitized / http://www.hathitrust.org/access_use#pd-google
Digitized by Google
Original from UNIVERSITY OF ILLINOIS AT URBANA-CHAMPAIGN

$$R = -\frac{2}{3}\left(\frac{r_2^2 P_2}{r_2^2 - r_1^2}\right)\left(1 - \frac{2 r_1^2}{x^2}\right) + 0.025h$$

$$S_1 = -0.075h + \frac{2}{3}\,\frac{r_2^2 P_2}{r_2^2 - r_1^2}$$

Their resultant

$$Q = \sqrt{S_1^2 + T_1^2 + R_1^2} \qquad (15)$$

$$a = 0.025h$$

$$C = \frac{2 r_1^2}{x^2}$$

$$q = -\left(\frac{r_2^2 P_2}{r_2^2 - r_1^2}\right) \times \frac{2}{3}$$

$$Q = -q\sqrt{3 + 11\left(\frac{a}{q}\right)^2 + 2b^2 + 10\left(\frac{a}{q}\right)} \qquad (16)$$

Q max., when, b, is maximum, or when, x, is minimum, x min. $= r_1$.

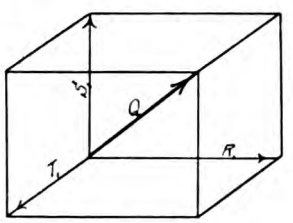

FIG. 4

THIRD NUMERICAL EXAMPLE

Substituting the numerical values of the previous example a = 2.5; b = 2; q = (−⅔ 9.95 = 6.65, we find at intrados

$$\text{Max } Q = -6.65\sqrt{3 + 11\left(\frac{2.5}{6.65}\right)^2 + 8 - \frac{2.5}{6.65} \times 10} =$$

$$= 19.68 \text{ tons.}$$

The above numerical examples illustrate in a very emphatic manner the difference between the results received by the reference-book formula that neglects the thickness of the arch and takes into consideration only tangential force acting along the neutral axes of the arch, and by the formula for the stress taken in the same direction, but corrected by the influence of co-ordinate stresses, and also by the formula giving the magnitude of a real maximum resultant stress acting in a different direction for each element of the arch ring but equal in magnitude for all the elements situated on the same level and at the same distance from the surface of the arch.

For the given example of an arch, the maximum stress, figured according to handbook formula, is 18 tons per sq. ft. and is only a tangential stress; in reality, as per my formula (12 bis) it is 19.76 tons (the co-ordinate stress as in the previous case is ignored). The influence of co-ordinate stresses is favorable and diminishes the maximum tangential stress to 17.4 as per the formula (14). The actual maximum stress is the resultant of the three co-ordinate forces and the formula (15) gives the magnitude of that force as 19.68 tons. As the arch was taken as being comparatively small, with thin walls and at a moderate depth, the figures show that the former method of computation is applicable with safety only for small arches under ordinary conditions and that in the construction of a dam consisting of a series of arches, as in the multiple arched type of dam, the material is more economically distributed than in long thick arches of a big radius in which the tangential stress alone, figured by old method, will give about the same thickness of the arch as for a gravity system dam

Generated on 2024-09-29 23:42 GMT / https://hdl.handle.net/2027/uiug.30112007837674
Public Domain, Google-digitized / http://www.hathitrust.org/access_use#pd-google
Digitized by Google
Original from UNIVERSITY OF ILLINOIS AT URBANA-CHAMPAIGN

Rotary Well Drilling

By COLIN CAMPBELL RAE

ROTARY drilling methods first made their appearance in California in 1907. In 1901 rotary drilling was first successfully accomplished in oil operation in the Spindle Top fields at Beaumont, Texas, for the loose unconsolidated materials which are common to that district. The standard method was a failure, but an improved type of rotary proved very successful. It is the best method for drilling wells in loose unconsolidated sands, gravels, and clays, but the standard tools are much better in any of the 'shells' such as silicious shales, hard flinty sandstones, and other hard formations. Many California companies now build rotary rigs 114 ft. high, with base 26 by 26 ft., making them the highest derricks in the oilfields. The usual standard rig has been about 82 ft. high, but the rotaries were first made 103 ft. high in order to allow four joints of casing to be pulled in one stand, and then increased to 114 ft. high, so that five joints might be pulled at once. This saves time and labor, and should be worth while, when one considers the long life of the average pumping well.

The principal parts of the machinery are a revolving table or whirler, two hydraulic pumps, two 40-hp. boilers, one 20-hp. Ajax engine, and a line-shaft to furnish power. The line-shaft has three sprocket-wheels, one connected by a long chain to the shaft, which turns the rotary by means of bevel gearing, and is controlled by a clutch and lever. The revolving table is a heavy rotating device, set on tool-steel rollers. The device grips the casing firmly, permitting the latter to be revolved and yet allowing it to be gradually lowered. The other two sprocket wheels on the line shaft are for the link-drive engine chain and the brake chain. The brake drum is operated by throwing in a clutch when it is necessary to raise the casing. The contractors building the rig include a calf-wheel, bull-wheels, and walking-beam, since the rig is changed later to use the standard tools. The drilling crew then begins to rig up. The bull-wheels are removed to make room for the line shaft and brake drum, and an extension is built on the rig for the engine house after the engine has been set in place. The sprocket wheel is lined up with the drive wheel on the line shaft, and the keys are driven. The engine is then bolted to the block tightly and braced. Movement toward the line shaft is prevented by braces 6 by 6 in. between the heading board and engine blocks, while the jar away from the line shaft is prevented by two long eye-bolts having the eye fastened to the headboard and the other end to the blocks by means of nuts and washers. The jack-posts (8 by 8 in.) are set up in their proper places

Generated on 2024-09-29 23:43 GMT / https://hdl.handle.net/2027/uiug.30112007837674
Public Domain, Google-digitized / http://www.hathitrust.org/access_use#pd-google
Digitized by Google
Original from
UNIVERSITY OF ILLINOIS AT
URBANA-CHAMPAIGN

for the line shaft and brake drum, and bolted to the sills of the derrick. Between the legs of the derrick two planks (2 by 12 in.) brace the heading posts on each side, while diagonal braces are put on the inside of the legs. The table is moved entire, and easily set into place between the floor-beams and secured with braces (6 by 6 in.), the sprocket wheel being lined up with the drive on the line shaft. The forge is built on the side of the derrick opposite to the pumps. Its foundation is a sand box, 4 by 6 ft. at the bottom and 8 by 12 ft. at the top, with brickwork extending about 18 in. above the floor at the front and sloping up to the rear. The forge is made about 20 by 15 in., and 10 in. deep. The hydraulic pumps used are the Parker or 'Gumbo Buster' type, duplex pattern, having removable cylinder liners, eight valves, and designed for 125 to 175 lb. pressure. The valve fits more loosely than in ordinary pumps, so as to reduce the abrasion produced by sediment. Duplicate pumps are provided to allow repairs to be made without stopping drilling. The packing in the glands lasts only a few hours when hemp is used, so old rubber valves are sliced, and one or more layers of that material employed. The expense of rubber valves is a large item, for their cost is about $1 each, and they become badly cut within a week by the heavy slush and sand. The pump is connected to the casing by means of a pipe-stand, hose line, and water-swivel. There are two stands connected to each other and having a gate in the centre for a blow-off. They are also equipped with valve-traps to prevent the plugging of the water-courses in the fish-tail bit with pieces of packing or trash from the sludge pit. A back pressure valve is placed in the goose-neck at the upper end of the swivel to relieve pressure on the hose. Two swivels are commonly used, one being attached to the joint of casing, while the other is in service. The mud or slush is important during the first thousand feet of drilling through the various sands, especially a quicksand, and it may serve to control gas pressure. The mixing pit is about 20 ft. from the derrick, and usually 12 by 8 ft. and 5 ft. deep. The heavy mud plasters up the sands and gravels, keeping them from caving, and also preventing the escape of drilling water into them. When it is necessary to change the bit, the mud is made very thick, so as to wall up the hole and prevent caving when the casing is pulled out. When a heavy clay or shale is drilled into, it is necessary to keep the mud thin, to prevent the bit from 'balling up', and to carry up the heavy mud.

The bit is usually fish-tail shaped, and the diamond points are rarely used except for very hard drilling. Bits are fastened into the bottom joint by means of a steel drilling collar. The width of the bit is 14 in., with a 6-in. shank having one hole ¾ in. on each flat side, through which the mud is forced in a whirling stream. The driller feeds the casing into the hole uniformly, keeping close watch on the action of the sprocket chain and rotary table, to see how the drilling is proceeding. Some drillers watch the chain, while others only tell by the jarring action of the table how the bit is working. When the clay is very sticky, the drill may 'ball up' and stick, being turned with difficulty. The usual remedy is to open the rotary grip rings and raise the casing a few feet, turning slightly with a pair of tongs and allowing the casing to slide back. This is continued until the casing can be turned freely with a

Generated on 2024-09-29 23:50 GMT / https://hdl.handle.net/2027/uiug.30112007837674
Public Domain, Google-digitized / http://www.hathitrust.org/access_use#pd-google
Digitized by Google
Original from
UNIVERSITY OF ILLINOIS AT
URBANA-CHAMPAIGN

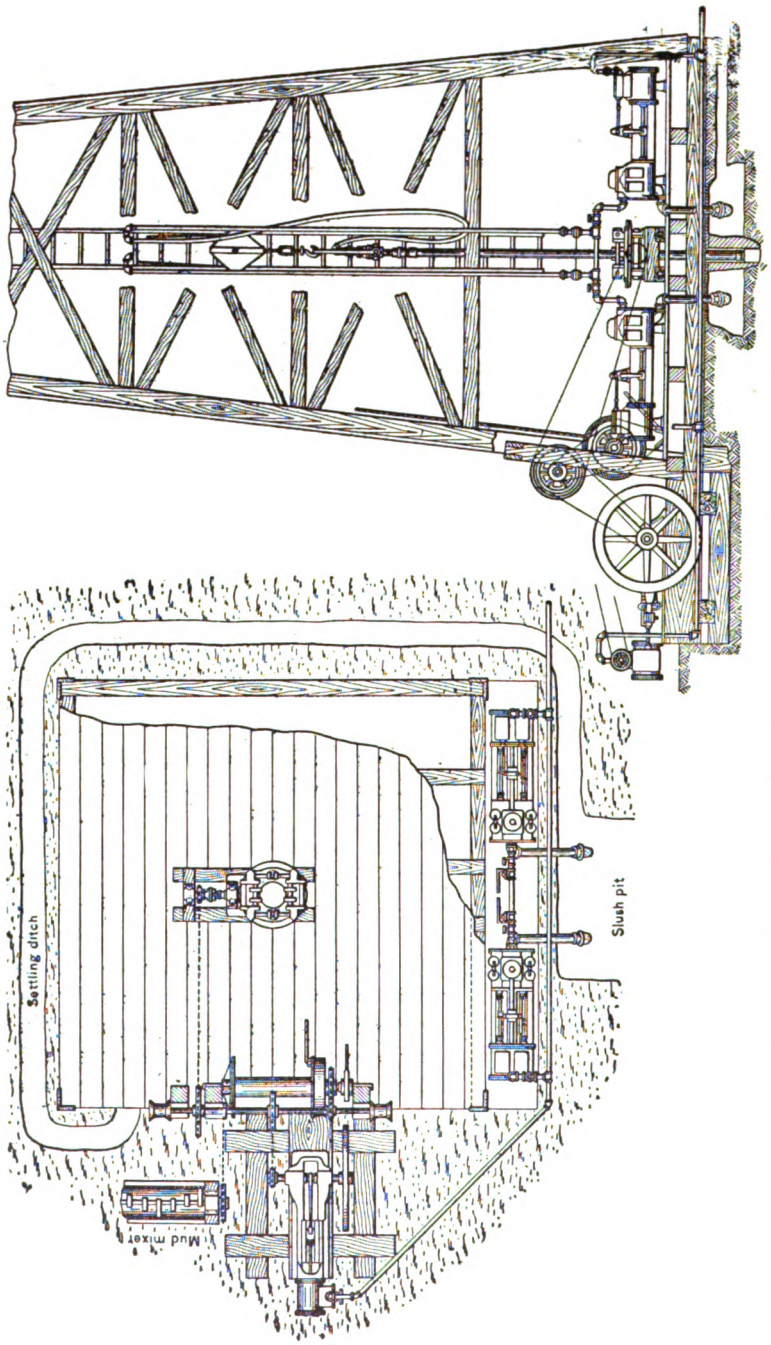

GENERAL ARRANGEMENT ROTARY DRILLING RIG. (U. S. GEOLOGICAL SURVEY.)

Generated on 2024-09-29 23:43 GMT / https://hdl.handle.net/2027/uiug.30112007837674
Public Domain, Google-digitized / http://www.hathitrust.org/access_use#pd-google
Digitized by Google
Original from
UNIVERSITY OF ILLINOIS AT
URBANA-CHAMPAIGN

pair of pipe tongs. The rotary may be run at a high rate of speed feeding very little at a time, or may be run slowly and fed faster. Sometimes boulders fall into the hole, causing the rotary to catch and jar, although still off the bottom. In that case the casing is lifted a few feet and rotated fast, feeding very slowly in order to get the boulder beneath the bit and allow it to be broken. In California the bits are usually replaced once a tour down to a depth of about 1400 ft., when it is customary to put in a sharp bit only once a day. There is no rigid rule about pulling out, but it depends on the formations and drills.

The work of pulling out the casing to replace the bit and running back again, forms an important part of the tour's work. While doing this work is about the only time that five men are really needed. One man works in the derrick and four men on the floor. The casing is pulled up in stands of four joints each, a steel-tool joint being put in the string to enhance the speed and prevent 'twisting off' by cross-threading or badly worn threads. The joints are broken by means of 'back-up' tongs (No. 15) hitched to the calf-wheel post and breaking tongs pulled by a line over the cathead on the line shaft. The joints are cleaned each time and greased with a mixture of white lead, graphite, and cylinder oil. The work of pulling and replacing casing is done very rapidly by the rotary, and the round trip for a 1000-ft. well is made in two hours, if nothing breaks. The chains of the tongs break occasionally, and some of the joints are broken with difficulty if the casing is slightly bent.

The string of 6-in. casing has been used for six to eight wells. After being used for that many wells, it is usually weakened with poor threads and worn collars, so it should be rethreaded and furnished with a new set of collars. In one instance the same casing was used for eight wells, with the result that on the last, one-third of the time was occupied with 'fishing' jobs, thus causing a poor record and costly drilling.

The usual 'fishing' job is due to 'twisting off', as the oilmen say. Because of the great torsional strain set up by the rotation of the heavy string of pipe against resistance due to friction, the casing often parts, usually at a weak collar or joint where the threads are badly worn or perhaps a little cross-threaded. When the 'twist off' is near the surface, it is at once perceptible in a sudden increase of speed in the circulating pumps, and a more rapid rotation of the rotary. If the casing has parted down about 1800 ft., the change is not perceptible at once, but the drilling action is usually changed. Sometimes the twisted-off portion will drill or rotate directly on the broken portion beneath, causing the drilling to be rough and hard. The test for this accident is to loosen the rotary, lift the casing several feet, and allow it to go back at a moderate speed, turning with tongs to try different positions. If the casing has parted it will usually go down between the lost part and the wall, since it is only a 6-in. string in a 14-in. hole.

The best 'fishing' tool in use is known as an 'overshot.' It is usually made of 10-in. joints, the lower one having a shoe which is slightly 'belled out', and contains three or four dogs. The dogs are usually pieces of steel about 18 in. long, 2 in. wide, and ½ in. thick. The tool is allowed to slip down over the twisted-off portion until the dogs are past the first collar, then it is lifted, the dogs catching in under the col-

Generated on 2024-09-29 23:45 GMT / https://hdl.handle.net/2027/uiug.30112007837674
Public Domain, Google-digitized / http://www.hathitrust.org/access_use#pd-google
Digitized by Google
Original from
UNIVERSITY OF ILLINOIS AT
URBANA-CHAMPAIGN

lar. This is an easy, rapid, and safe fishing tool. If the bit alone is lost, the fishing job is more difficult. Two bits were lost by the Nevada Petroleum Co. and were never recovered, although various methods were tried. It is usually cheaper to drill past the bit than to waste several weeks in useless fishing.

The rotary does not go through hard formations as well as does the standard, but it does make favorable speed, and in softer formations is far ahead of the standard. The drilling is accomplished much quicker, and a saving is made in casing, as only one string of 10 in. is placed in 1800 ft. of rotary-drilled hole, while a standard well of that depth would have about 500 ft. of 16-in. 'stove pipe', 1200 ft. 12½-in., and 1800 ft. 10-in. casing. The disadvantage of the rotary in the local fields lies in the fact that it is considered necessary to change over to the standard tools at 1800 ft., because of the pressure of hard formation below that depth, the difficulty of drilling a deep rotary hole, and on account of the danger that the heavy circulating water may 'mud up' the oil sands.

The Nevada Petroleum Co. has found that wells drilled by the combined rotary and standard methods have progressed faster, but the total cost is just about the same as if the standard method alone had been used, because of the time lost in changing the equipment from rotary to standard. Unfortunately, a few of the rotary holes have been made crooked by forced or careless drilling. This would happen under similar conditions with standard rigs. There has been a great deal of prejudice against the rotary among standard drillers, which has worked to the rotary's harm. The standard drillers are only too glad to announce a crooked hole when they begin to complete the drilling, and perhaps a few of the crooked holes have been due to their own carelessness in putting the casing into the hole.

The rotary is undoubtedly the cheapest and most rapid method of drilling loose and unconsolidated materials, and with it fair progress can be made through hard formations. The future will perhaps see the drilling of wells by a combined rotary-standard method with apparatus permitting change from one to the other method at will. Several types of such apparatus have been tried, though with no great success, since there are many problems to be worked out. Many attempts have been made to devise a bit which can be replaced when dull without pulling all the casing, as is necessary at present. Other problems in cementing rotary holes and drilling into sands with the rotary, offer opportunities for valuable improvements. While a few claim that the rotary is a failure in California, the facts do not sustain this claim, and time will probably show a development of the principles of the rotary making it immensely valuable to oil-well drilling.

Generated on 2024-09-29 23:41 GMT / https://hdl.handle.net/2027/uiug.30112007837674
Public Domain, Google-digitized / http://www.hathitrust.org/access_use#pd-google
Digitized by Google
Original from
UNIVERSITY OF ILLINOIS AT
URBANA-CHAMPAIGN

Water Emulsions in Crude Petroleum

By ALLEN C. WRIGHT*

WATER, the oil producer's bogie, must be combated sooner or later in the production of petroleum. Its occurrence with the oil in any form means the beginning of the end, with the cost of production increasing in proportion to the amount of water that must be handled. This cost increases, not alone with the water, but also with the extent of the emulsification. The degrees of the latter may be roughly classified as 'free,' wherein the water settles readily; 'semi-free', wherein a portion of the water settles of its own volition and the remaining portion may be separated on heating the oil to a point less than that at which the water will vaporize; and 'rebellious,' wherein the water cannot be eliminated except by vaporization.

To the cost of separating the water and foreign matter from the oil as produced must be added the increased cost of production. Thus it is seen that the production of a complete or rebellious emulsion is a far more serious matter than that wherein the water is held in a free condition. Instances of rebellious emulsion have been observed wherein an oil of 25° gravity (Baumé) has taken up and held over 75% of water and foreign matter in so thoroughly an emulsified form that it has stood for a number of years without the water settling out. This emulsion as produced is extremely viscous, reddish brown in color, and of a jelly-like consistence having a gravity between 10 and 11° Baumé and, as observed when flowing from the well from which it is emptied not in a stream but in chunks, it resembles raw liver. It is needless to say that this emulsion is absolutely worthless and that the greatest problem it entails is its disposition, as its transportation by pipe-line is practically impossible because of the high viscosity of the mass.

On being centrifuged, the foreign matter would be thrown down in what appeared as a solid plug, grayish in color, that resembles a fine silt or shale, so firmly impacted that mechanical means are necessary to dislodge it from the centrifuge tube. When this mass is placed in a dish it will support good sized buckshot on its surface. From the character of this foreign matter, which is found more or less throughout the water-bearing oils, arises the general misconception that this is not water, but silt, or shale, or diatomaceous earth. This is an erroneous assumption, as may be proved by evaporation, which, when completed, will leave in the evaporating dish a residuum deposit composed of but a slight trace of oil and mineral salts. These mineral salts are foreign to the

*General Manager, Petroleum Rectifying Co., 530 California St., San Francisco.

Generated on 2024-09-29 23:42 GMT / https://hdl.handle.net/2027/uiug.30112007837674
Public Domain, Google-digitized / http://www.hathitrust.org/access_use#pd-google
Digitized by Google
Original from UNIVERSITY OF ILLINOIS AT URBANA-CHAMPAIGN

oil and are held in solution by the water. Undoubtedly they are to a large extent responsible for the degree of emulsion found, in that they carry a saponifying agent, and, held as they are in a solution by the water, the skin or membrane surrounding the globule is strengthened according to the degree of saponification. Thus in extreme cases the relation of these globules is analogous to that of the beaten white of an egg, in that, while they rest against one another, the toughness of their membrane prevents their agglomeration, and nothing short of rupture of the latter will permit them to unite.

It is interesting to note that from the study of oil emulsions it has been found that their age can be approximately determined by microscopical examination of the water globules. For example, where the water globules are spherical in shape but varying greatly in size, it is safe to assume that the emulsion is of recent origin, and formed at or near the point of its production. Where the globules are spherical in shape and uniform in size, it may be assumed that the emulsion was caused some time prior to, and not at, the point of production. Finally, where the water globules are found irregular in shape but of uniform size, with a withered or skinny membrane surrounding them that may be likened somewhat to linseed oil that is dried in the air, it is safe to assume that the emulsion is of ancient date, the probable cause being the admission of water to the oil measures under pressure years hence. Of all the emulsions, this latter is the most rebellious and difficult to handle, resisting all efforts at separating excepting that of direct distillation or the application of electricity.

The value of oil today increases with each two points rise in gravity over 17° Baumé. The presence of water and foreign matter in oil means a lessened Baumé gravity. This is shown in the accompanying table. For example, let us assume that a 20° gravity oil carries 10% foreign matter. This, if salable, is worth probably 35c. minus deductions. The removal of foreign matter will raise the gravity over one degree, thus restoring the true gravity of the oil to over 21° and at the same time increasing its market value from 35 to 50c., a gain of 15c., from which must be deducted the cost of cleaning. If, however, during the process of cleaning, any of the lighter constituents are lost through vaporization or otherwise, the purpose is somewhat defeated in that the loss by vaporization must be a charge against cleaning, and at the same time the gravity has not been raised because of this loss, meaning, also, the loss of the difference in price.

The problem which confronts the producer of oil carrying water emulsions, whose one object is that of dehydration, is to find the best remedy for the condition as it exists. Undoubtedly water may be removed from a large percentage of the oils by application of heat. This, in the majority of cases, may be termed not alone a drastic but expensive remedy, in which the trouble is cured at a sacrifice of production, for certainly oil lost through evaporation, seepage, or unnecessary consumption under the boilers or otherwise means just that much decrease in production. This curtailment is in many cases not apparent, because the producer does not measure his production by what he actually produced, but by the amount he sells. In this way he is apt to delude himself into the idea that extravagance is economy.

Generated on 2024-09-29 23:45 GMT / https://hdl.handle.net/2027/uiug.30112007837674
Public Domain, Google-digitized / http://www.hathitrust.org/access_use#pd-google
Digitized by Google
Original from UNIVERSITY OF ILLINOIS AT URBANA-CHAMPAIGN

Generated on 2024-09-29 23:49 GMT / https://hdl.handle.net/2027/uiug.30112007837674
Public Domain, Google-digitized / http://www.hathitrust.org/access_use#pd-google

Digitized by Google

TABLE SHOWING THE BAUME GRAVITY OF OIL BEFORE AND AFTER THE WATER IS TAKEN OUT.

Baumé Gravity of Wet Oil	Percentage of Water in Emulsion.													
	2%	4%	6%	8%	10%	15%	20%	25%	30%	35%	40%	45%	50%	55%
	Gravities of Dehydrated Oil.													
15.0	15.1	15.2	15.3	15.5	15.6	15.9	16.3	16.7	17.2	17.8	18.5	19.4	20.3	21.8
15.5	15.6	15.8	15.9	16.0	16.1	16.5	16.9	17.4	18.0	18.7	19.4	20.4	21.4	23.0
16.0	16.1	16.3	16.4	16.5	16.7	17.1	17.6	18.1	18.7	19.5	20.3	21.4	22.6	24.3
16.5	16.6	16.8	16.9	17.1	17.3	17.7	18.2	18.8	19.4	20.3	21.2	22.4	23.7	25.5
17.0	17.1	17.3	17.5	17.6	17.8	18.3	18.8	19.5	20.2	21.1	22.0	23.4	24.8	26.7
17.5	17.7	17.9	18.0	18.2	18.4	18.9	19.5	20.2	20.9	21.9	22.9	24.3	25.9	27.9
18.0	18.2	18.4	18.5	18.7	19.0	19.5	20.1	20.9	21.7	22.7	23.8	25.3	27.0	29.2
18.5	18.7	18.9	19.1	19.3	19.5	20.1	20.8	21.5	22.4	23.5	24.7	26.3	28.1	30.4
19.0	19.2	19.4	19.6	19.8	20.1	20.7	21.4	22.2	23.2	24.3	25.6	27.3	29.2	31.8
19.5	19.7	19.9	20.2	20.4	20.7	21.3	22.1	22.9	24.0	25.2	26.6	28.4	30.3	33.0
20.0	20.3	20.5	20.7	21.0	21.2	21.9	22.7	23.6	24.7	26.0	27.5	29.3	31.5	34.4
20.5	20.8	21.0	21.2	21.5	21.8	22.5	23.3	24.3	25.5	26.8	28.4	30.4	32.7	
21.0	21.3	21.5	21.8	22.1	22.3	23.1	24.0	25.0	26.3	27.7	29.4	30.5	33.8	
21.5	21.8	22.1	22.3	22.6	22.9	23.7	24.6	25.8	27.0	28.8	30.3	32.5	35.0	
22.0	22.3	22.6	22.9	23.2	23.4	24.3	25.3	26.5	27.8	29.4	31.2	33.6		
22.5	22.8	23.1	23.4	23.7	24.0	24.9	26.0	27.2	28.6	30.2	32.2	34.6		
23.0	23.3	23.6	23.9	24.2	24.6	25.5	26.6	27.9	29.4	31.1	33.1			
23.5	23.8	24.2	24.5	24.8	25.1	26.2	27.3	28.6	30.2	32.0	34.0			
24.0	24.3	24.7	25.0	25.3	25.7	26.8	27.9	29.3	30.9	32.8	35.0			
24.5	24.8	25.2	25.5	25.9	26.3	27.4	28.6	30.0	31.7	33.7				
25.0	25.4	25.7	26.1	26.4	26.8	28.0	29.3	30.7	32.5	34.5				
25.5	25.9	26.2	26.6	27.0	27.4	28.6	29.9	31.4	33.3					
26.0	26.4	26.8	27.2	27.6	28.0	29.2	30.6	32.2	34.0					
26.5	26.9	27.3	27.7	28.1	28.6	29.8	31.3	32.9	34.8					
27.0	27.4	27.8	28.2	28.7	29.2	30.4	32.0	33.7						
27.5	27.9	28.4	28.8	29.2	29.7	31.1	32.6	34.3						
28.0	28.4	28.9	29.3	29.8	30.3	31.7	33.3	35.1						
28.5	29.0	29.4	29.9	30.4	30.9	32.3	34.0							
29.0	29.5	30.0	30.5	31.0	31.5	32.9	34.6							
29.5	30.0	30.5	31.0	31.5	32.0	33.5								
30.0	30.5	31.0	31.5	32.1	32.6	34.2								

Example:—Assuming that oil as produced shows 21.5° gravity, with 30% water, the gravity of the oil when dehydrated will be 27°; an increase of 5½ degrees.

Original from UNIVERSITY OF ILLINOIS AT URBANA-CHAMPAIGN

The electrical dehydration of petroleum accomplishes the desired separation without chemical or physical alteration.†

Where oil and water emulsion is submitted to an electrical field of sufficient potential, the water particles draw together and coalesce until they are of such size that their specific gravity overcomes the viscosity of the oil, and settling is effected. The agglomeration of the water particles takes place in the form of chains, or streamers, reaching from one electrode to the other. To prevent too great a number of these chains forming simultaneously, thus causing a temporary short circuit with its attendant waste of power, the inner electrode is rotated relative to the outer.

To facilitate the settling of the water globules, the electrodes, forming the fields through which the oil is passed, are constructed conical in shape. Thus the water particles in their descent have but a short distance to travel until they come in contact with the wetted septum surrounding the outer electrode, which immediately absorbs them and offers the water collected a continuous, wick-like channel downward through the oil. The principle of the wetted septum is that of a filter media, which, when primarily engaged with one phase of the mixture under treatment, is not miscible with the other, and, as applied, it constitutes a cloth bag or septum that is thoroughly wetted with the internal phase of the mixture. In this case this is the water at the time of its submersion in the mixture to be treated. Thus the water-wetted septum has no affinity for the oil, but readily absorbs and conducts downward through it such free water as may be brought in contact with it, and in this way facilitate the separation. This principle also applies to the wetted-septum traps, where used in removing free water from the oils, independently of, or prior to, submitting it to electric treatment, and by its application, the necessity of allowing the oil to stand in the sumps is avoided.

The treater consists of a galvanized iron shell 3 ft. in diameter and 12 ft. high, in which there are two electrodes. The electrical supply is led to the inner electrode, which is suspended in, and concentric with the outer electrode and insulated from it. The space between the two forms the electrical field through which the emulsion, in passing, receives treatment. The shell of the treater proper being set in the soil, and otherwise grounded, does away with the element of danger to human life.

COMPARATIVE COSTS OF DEHYDRATION

Based on 4-treater plant of estimated daily capacity of 1500 bbl. cleaned oil, dehydrated to less than 2%. Assuming that exhaust steam or gas is available, no charge is made for warming oil. Approximate cost of plant, installed, $3500.

Interest, 10%, and upkeep on plant, per day	$0.96
Labor and supplies	0.50
Power for treaters, 70 kw-hr., at 2c	1.40
Power for motor and lights, 50 kw-hr., at 2c.	1.00
Operating cost for 1500 bbl. oil cleaned	$3.86
License charge, 1500 bbl. oil at 1.333c.	20.00
Total cost of cleaning 1500 bbl. oil	$23.86
Total cost per bbl. oil cleaned	1.6c.

COST OF COOKING (estimated average.)
(Interest and upkeep on boiler plant, not included.)

1500 bbl. net oil—loss by evaporation and seepage in sump (3%), 45 bbl. at 35c.	$15.75
1455 bbl. net oil—loss by evaporation by cooking (5%), 72.75 bbl. at 35c.	25.45
Fuel—30 bbl. at 35c	10.55
Labor—wage of 2 men at $3 each for 2 days	12.00
Total cost of dehydrating 1425 bbl. oil	$63.75
Cost per bbl. of oil cleaned	4.4c.

†See description of process and apparatus i n April issue of *Western Engineering*.

Generated on 2024-09-29 23:47 GMT / https://hdl.handle.net/2027/uiug.30112007837674
Public Domain, Google-digitized / http://www.hathitrust.org/access_use#pd-google
Digitized by Google
Original from UNIVERSITY OF ILLINOIS AT URBANA-CHAMPAIGN

Tests of a Novak Patent Centrifugal Pump

By OSCAR C. GOERIZ*

THE Novak revolving diffusor affords a very effective means of reducing internal friction losses in centrifugal pumps. A 2-in. Novak pump, designed by me, and built by the Joshua Hendy Iron Works of San Francisco, has been thoroughly tested at the hydraulic laboratory of the University of California at Berkeley. The following description of the test will illustrate the action of the pump.

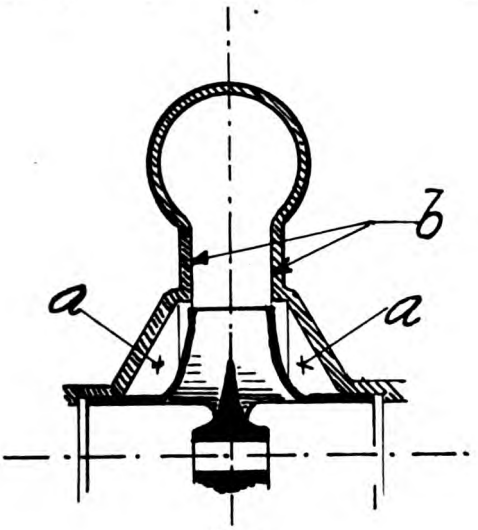

FIG. 1.

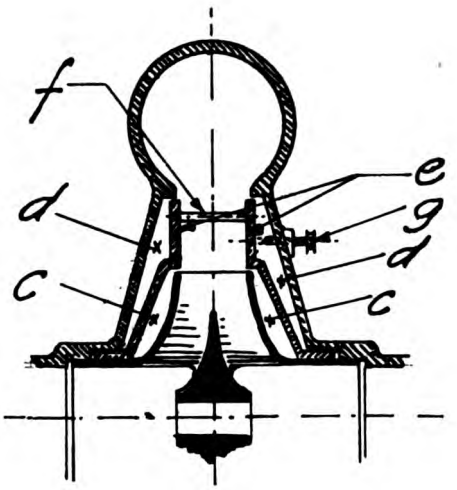

FIG. 2.

In Fig. 1 is a schematical section through a common centrifugal pump for comparison with the Novak illustrated in Fig. 2, in which the means for protection against wear due to sand and grit are not shown. In the ordinary pump the water in chamber *a* is being churned according to the conditions of disc friction that exist when the impeller runs at normal speed and the casing is stationary. In the Novak pump the diffusor rotates freely and the water in *c* acquires a velocity which is a mean between that of the runner and the diffusor. The friction acting on the runner is passed on to the water in *c*, from there to the diffusor, then to *d*, and is finally spent along the casing. Neglecting the whirlpool space for the present, it may be expected that the loss of energy by skin friction for the small runner diameter will equal the loss represented by the larger

*Consulting Engineer, Postal Telegraph Bdg., San Francisco, Cal.

Generated on 2024-09-29 23:48 GMT / https://hdl.handle.net/2027/uiug.30112007837674
Public Domain, Google-digitized / http://www.hathitrust.org/access_use#pd-google
Digitized by Google
Original from UNIVERSITY OF ILLINOIS AT URBANA-CHAMPAIGN

diffusor disc revolving at a slower speed inside of the stationary casing, taking into consideration the difference in the velocity of the runner and diffusor. The formula generally used for loss of energy by disc friction is $W = \frac{d^2 \times v^3}{500}$ where W = foot-pounds per second, d = diameter in feet, and v = the circumferential velocity of the disc in feet per second. While this formula should be modified according to the condition of the surfaces, and also according to the water volume enclosed within the chambers *a*, *c*, and *d*, it will permit certain conclusions to be drawn as to the merits of the Novak system. The pump under discussion has a 6-in. runner and is intended to be operated by a direct-coupled 2-pole electric motor at 3500 r.p.m. The diffusor is 8½ in. diameter. A common pump with 6-in. diam. runner, making 3500 r.p.m., will absorb 386 ft.-lb. per second, according to the above formula, or 0.7 hp. for disc friction alone. In this pump, Fig. 1, the water discharged by the impeller rushes along *b*, while the walls *e* in Fig. 2 are being rotated, thereby offering less resistance to the passage of the water. It follows, therefore, that a larger part of the kinetic energy will be converted into potential energy, or a larger total head will be created by the Novak pump. This fact was amply demonstrated in the tests described below, as well as the fact that less power was required, due to the reduction of skin friction.

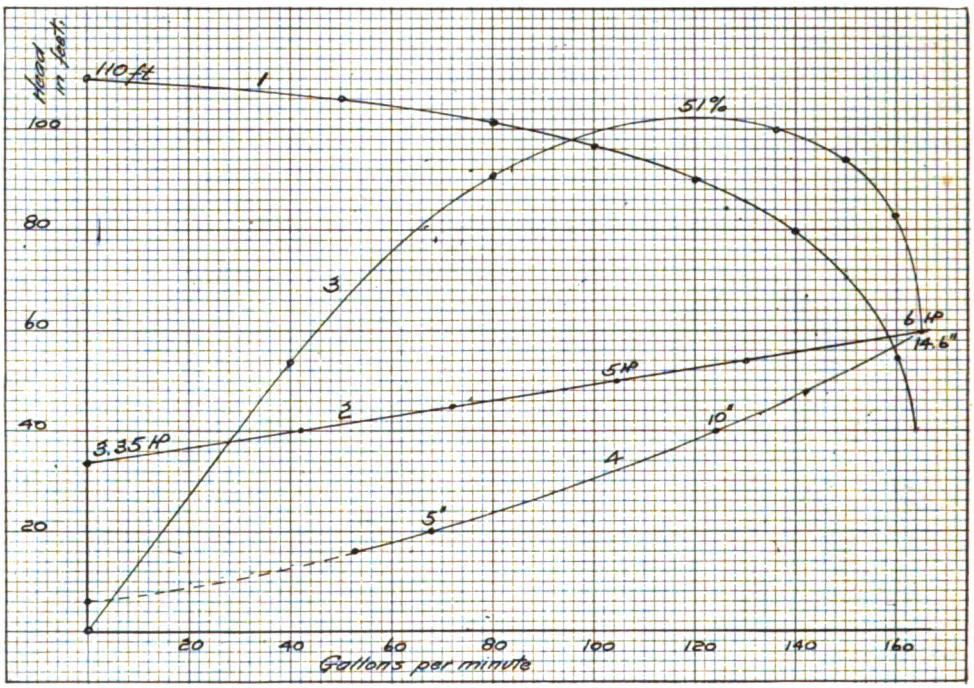

FIG. 3. TEST CURVES FOR NOVAK PUMP WITH DIFFUSOR FREE.

Applying the above formula to the Novak pump with a 6-in. runner making 3500 r.p.m. shows that the 8½-in. diffusor running at a speed of 1260 r.p.m. will require 101 ft.-lb. per sec-

Generated on 2024-09-29 23:50 GMT / https://hdl.handle.net/2027/uiug.30112007837674
Public Domain, Google-digitized / http://www.hathitrust.org/access_use#pd-google
Digitized by Google
Original from UNIVERSITY OF ILLINOIS AT URBANA-CHAMPAIGN

ond to overcome its skin friction. On the other hand the water in chamber c is enclosed on one side by the runner turning at 3500 r.p.m., on the other side by the diffusor running at 1260 r.p.m. The skin friction of the runner therefore will be the same as if it revolved in still water at a speed of 3500 –1260 = 2240 r.p.m. These speeds have been calculated from the above formula, and considering that a 6-in. disc at 2240 r.p.m. will also use 101 ft.-lb. per second for skin friction, 101 ft.-lb. per second = 0.184 hp. This is the loss for the Novak arrangement, as compared with 0.7 hp. loss in the common pump.

The comparative losses for both cases may also be checked in the following manner. If the water rotates with average velocity as shown in Fig. 1, the speed would be 1750 r.p.m., while as shown in Fig. 2 the water should churn at an average speed between 3500 and 1260, namely, 2380 r.p.m. This latter speed compared with 3500 r.p.m. gives a difference of 1120 r.p.m., and reasoning along the lines of the formula, the Novak pump should have $\frac{1120^3}{1750^3} = 0.64 = 0.26$ times the skin friction loss in a common pump. As $0.26 \times 0.7 = 0.182$ hp., a result is found which agrees very well with the previous figure of 0.184 hp., which indicates that one may expect a difference of about ½ hp. between the common and the Novak pump of this size as far as skin friction is concerned. The water discharged from the impeller will gradually diminish in velocity within the whirlpool space, and as long as its velocity exceeds that of the sides of the revolving diffusor, it will assist in driving the latter, as well as the studs F connecting both halves of the diffusor. Therefore, one might expect that the diffusor would rotate at a

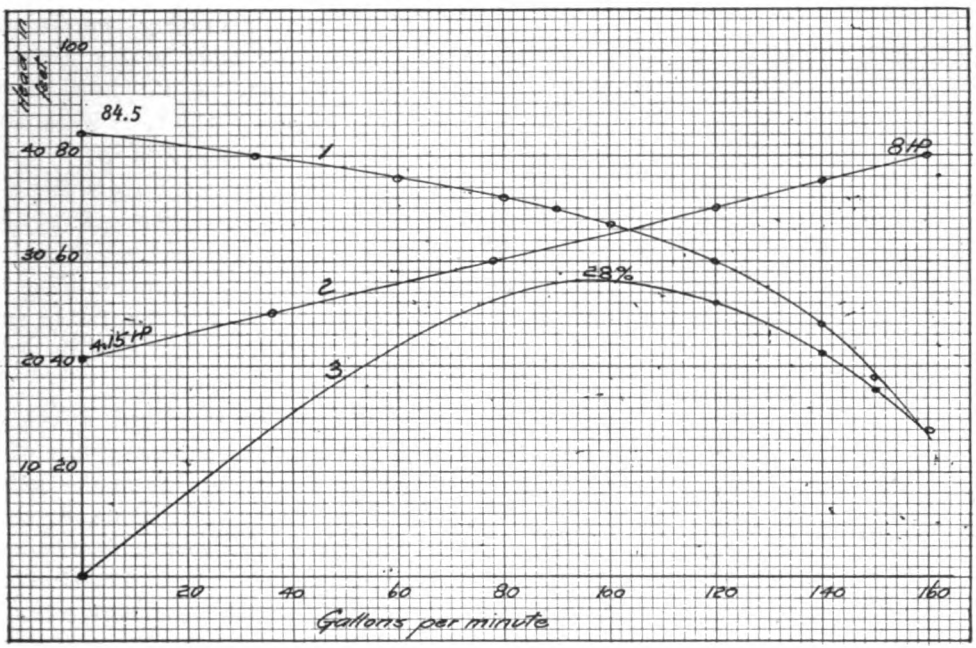

FIG. 4. TEST CURVES FOR NOVAK PUMP WITH DIFFUSOR LOCKED.

Generated on 2024-09-29 23:46 GMT / https://hdl.handle.net/2027/uiug.30112007837674
Public Domain, Google-digitized / http://www.hathitrust.org/access_use#pd-google
Digitized by Google
Original from
UNIVERSITY OF ILLINOIS AT
URBANA-CHAMPAIGN

rate of 1300 to 1400 r.p.m. While it was found impossible to determine the speed of the revolving diffusor when the tests were made, the diffusor could be blocked completely by the pin *g*, so that the results of two series of tests could be compared, one of which being made with the diffusor rotating freely, the other with the diffusor held stationary.

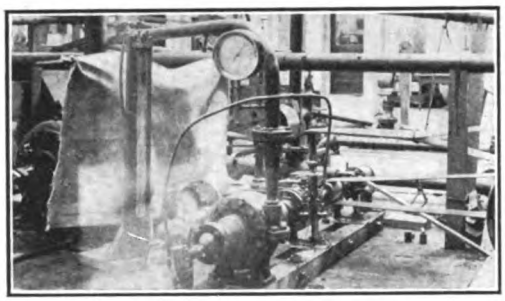

FIG. 5. END VIEW OF PUMP AND TEST APPARATUS.

Fig. 5 and 6 show two views of the pump with testing appliances. The pump, while designed for direct connection to a motor, was coupled to a countershaft which in turn was belted to a motor. This necessitated making brake tests at the far end of the jackshaft before and after the pump tests, so that the brake-horsepower on the jackshaft was determined for the various kilowatt readings at the motor, independent of the influence of stretching of the belt, or friction loss in the shaft bearings. The latter, being of common stock quality, did not allow speeds over 3100 r.p.m. for any length of time, therefore it was found impossible to test the pump at 3500 r.p.m., which is the speed for which it was designed. The pump discharge is 2 in. diam. and there were two 2-in. suction ells. The latter were joined, and as an ordinary 2 by 2 by 2 T was used, the speed in the vertical 2-in. suction pipe was too high, as the velocity of the water was reduced while entering into the suction ells proper. This condition accounts for some energy loss due to eddies. The mercury column being connected to the lower branch of the T did not indicate as much suction as there must have been at the ells proper. If a 3-in. suction had been used in connection with the two 2-in. branches, the operating conditions would have been more nearly normal, and the efficiency would have been somewhat greater. The tests were carried on by E. A. Abeel and W. P. Custer, who have graduated from the engineering college, and who deserve the highest credit for the manner in which they prepared, under rather unfavorable circumstances, for the tests, and for the thoroughness and care in their readings and investigations.

The water was measured direct in tanks of known dimensions, runs of 5 to 7 minutes time being made under constant operating conditions, so that the volume of water was determined with absolute accuracy. The suction head was read from a mercury column, the discharge head by a calibrated pressure test gauge, the elevation from the suction to the pressure gauge was added when the total head was compiled. The speed was fairly constant and the tachometer readings were checked at various times. The horsepower input into the jackshaft was determined by pony brake tests and compared with the corresponding kilowatt readings at the electric motor.

The conditions of operation are shown in Fig. 3, with the diffusor freely revolving and a pump speed of approximately 3060 r.p.m. When the pump discharge was closed, about 3.35 hp. was required at the pump shaft, and a total lift of 111 ft. was attained.

Generated on 2024-09-29 23:41 GMT / https://hdl.handle.net/2027/uiug.30112007837674
Public Domain, Google-digitized / http://www.hathitrust.org/access_use#pd-google
Digitized by Google
Original from UNIVERSITY OF ILLINOIS AT URBANA-CHAMPAIGN

At the point of best efficiency 120 gal. per minute at 90 ft. total lift (9.6-in. vacuum-gauge reading) with 51% efficiency was delivered by the single-stage runner. From this it may be concluded that at 3500 r.p.m. the pump in its present condition will deliver 137 gal. per minute against a total head of 118 ft., requiring 7½ hp. with 55% efficiency (using a 3-in. suction pipe and taking into consideration the fact that the friction losses will not increase with the higher speed at the same rate as the duty of the pump). In Fig. 4 the pump with locked diffusor is compared with the above conditions, while running at about 3010 r.p.m. average speed.

While in the operation of the closed pump with the free diffusor, only 3.35 hp. was required, 4.15 hp. was required for the stationary diffusor, and only 84.5 ft. total lift was reached. At the point of highest efficiency only 100 g.p.m. was delivered against a total lift of 67 ft., using about 6.55 hp. (as against 5.25 hp. in Fig. 3) acting on the shaft, the efficiency being about 28 per cent.

A drop in efficiency from 51 to 28% is very remarkable, and it demonstrates the value of the Novak diffusor as a means of reducing the power input, while at the same time it shows the efficiency of this method for the conversion of kinetic into potential energy. The curve for the vacuum-gauge readings marked No. 4 in Fig. 3 indicates that in spite of the high speed of the shaft, a high vacuum can be reached. This is partly due to the design of the impeller and in a large degree to the excellent workmanship on the part of the manufacturer.

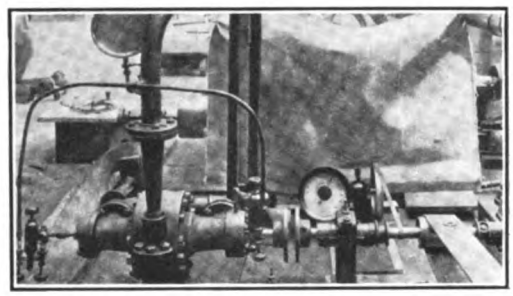

FIG. 6. SIDE VIEW OF PUMP READY FOR TEST.

Generated on 2024-09-29 23:45 GMT / https://hdl.handle.net/2027/uiug.30112007837674
Public Domain, Google-digitized / http://www.hathitrust.org/access_use#pd-google
Digitized by Google
Original from
UNIVERSITY OF ILLINOIS AT
URBANA-CHAMPAIGN

The Engineering Digest

The Present State of Development of Large Steam Turbines*

By A. G. CHRISTIE †

THE efficiency of a steam turbine may be expressed in terms of pounds of steam per kw-hr., as an efficiency ratio or as the b.t.u. required per kilowatt-hour.

The steam consumption is dependent on the initial steam pressure, its temperature or quality, and the condenser pressure. These factors vary in almost every test and the effect of a variation in each is not the same for all classes of turbines. Hence, different turbines cannot usually be compared satisfactorily on the basis of their steam consumption alone.

If the steam could expand freely to exhaust pressure in a turbine without radiation, friction, eddy, or windage losses, its expansion would be adiabatic and on the Rankine cycle. The 'efficiency ratio' expresses the proportion of the heat actually turned into work to that available from such an adiabatic expansion. In other words, it expresses the efficiency of the actual turbine as compared to the ideal turbine, and is independent of the type of turbine.

The b.t.u. per kw-hr. is figured above the heat of the liquid at exhaust pressure. This is not a satisfactory standard by which to compare results, for it is largely dependent on conditions beyond the control of the turbine builder. For instance, if the plant does not contain superheaters, the b.t.u. per kw-hr. will be high. The same will be true of a plant which has a warm cooling-water supply for condensers and consequently carries low vacuum. Yet the turbines may be designed to give a high efficiency ratio under these conditions. In fact, they may be able to utilize the heat available more efficiently than the turbines in another plant with both high superheat and high vacuum.

This can be seen in the table, in which recent turbine tests have been tabulated. The Brown-Boveri turbine at the Dunstan power plant uses 14,980 b.t.u. per kw-hr. with an efficiency ratio of 68.8%. Yet the Westinghouse City Electric with a lower steam pressure, lower superheat, and lower vacuum, has an efficiency ratio of 68.9%, though using 16,925 b.t.u. per kw-hr. The Erste Brünner Vienna turbine requires 16,460 b.t.u. per kw-hr. with 71.8% efficiency ratio. It is therefore apparent that the efficiency ratio alone will express in the best manner the degree to which the designer has approached ideal results in his turbine.

The test results in the table were grouped in order to analyze the relative merits of the different types of turbines on the basis of efficiency ratios. The Curtis-Parsons machines built by Erste Brünner hold first place in the list, but are followed closely by others of the same type built by Brown Boveri and Westinghouse Machine Co. The Parsons turbines built by Allis-Chalmers and Brown Boveri also show high efficiencies. The second class in the order of efficiency include turbines of the Curtis-Rateau and Curtis-Zoelly types, among which the turbines of the A. E. G. and British Westinghouse Co. show remarkably good results. The next group includes simple Zoelly and Rateau turbines. The last group comprises straight Curtis types.

The superiority of the Curtis-Parsons over the Parsons type is probably due to the re-

*Abstract from *Journal* American Society of Mechanical Engineers, May.
†Mechanical Engineer, Madison, Wisconsin.

Generated on 2024-09-29 23:41 GMT / https://hdl.handle.net/2027/uiug.30112007837674
Public Domain, Google-digitized / http://www.hathitrust.org/access_use#pd-google
Digitized by Google
Original from
UNIVERSITY OF ILLINOIS AT
URBANA-CHAMPAIGN

duction in the fluid friction and rotational losses occurring in the first cylinder of the Parsons by the use of a Curtis stage in this section.

in steam, produces losses which are apparently somewhat larger than the combined whirling losses and leakage in the Parsons drum turbines. Both the Zoelly and Curtis-

Maker of Turbine	Type	Date of Test	Load-Kw.	R.p.m.	Steam Pressure Lb. Absolute	Temperature at Throttle, deg. fahr	Vacuum referred to 29.92" Bar	Condenser Pressure, Lb. Absolute	Lbs. of Steam per Kw-Hr.	B.t.u. per Kw-Hr.	Heat Utilized per Lb. of Steam	Heat Available per Lb. of Steam	Efficiency Ratio	Reference
Erste Brünner M. F. G.	Curtis-Parsons	1910	2128	1500	156.2	482	27.89	0.995	13.82	16460	247.0	343.8	71.8	Periodische Mitteilungen
Erste Brünner M. F. G.	Curtis-Parsons		6000	960	184.9	573	28.18	0.854	12.56	15570	271.5	380.7	71.3	Zeit. D.V.D. Ing., 12/10/'10
Erste Brünner M. F. G.	Curtis-Parsons	1910	7442	960	192.0	584	28.18	0.853	12.625	15705	270.2	384.4	70.3	Periodische Mitteilungen
Westinghouse Machine Co.	Curtis-Parsons	1910	9173	1800	181.7	433	27.81	1.032	14.57	16925	234.1	340.2	68.9	Trans. A.S.M.E., vol. 32
Brown Boveri & Cie.	Curtis-Parsons		3053	1360	150.2	505	29.00	0.456	13.01	15990	262.2	385.5	68.0	Dinglers P.J., 6/17/'11
Erste Brünner M. F. G.	Curtis-Parsons	1910	1416	1260	128.2	482	27.60	1.137	15.18	18060	224.6	326.5	68.8	Periodische Mitteilungen
Brown Boveri & Cie.	Curtis-Parsons	1911	1750	1500	176.4	586	27.08	1.392	14.23	17500	239.5	354.8	67.5	Zeit. F.D.G. Turb., 5/30/'11
Brown Boveri & Cie.	Curtis-Parsons	1910	3764	1500	161.2	561	28.77	0.562	13.04	16290	261.5	391.4	66.8	Zeit. F.D.G. Turb., 5/30/'11
Westinghouse Machine Co.	Curtis-Parsons		9830	750	192.2	475	27.22	1.322	15.15	17790	225.2	336.0	67.0	Trans. A.S.M.E., vol. 32
Brown Boveri & Cie.	Curtis-Parsons	1911	1495	3000	200.6	563	26.41	1.720	14.78	17880	230.7	345.5	66.8	Data from Manufacturer
Brown Boveri & Cie.	Curtis-Parsons	1911	1271	3000	172.1	568	27.31	1.278	14.61	17880	233.5	354.3	65.9	Data from Manufacturer
Westinghouse Machine Co.	Curtis-Parsons		11466	750	191.7	484	28.07	0.910	14.45	17210	236.0	360.5	65.5	Trans. A.S.M.E., vol. 32
Erste Brünner M. F. G.	Curtis-Parsons		1250	3000	184.9	573	27.89	0.996	14.32	17680	238.2	373.1	63.9	Zeit. D.V.D. Ing., 12/10/'10
Brown Boveri & Cie.	Curtis-Parsons	1910	3320	1500	180.9	525	29.02	0.440	13.50	16680	252.7	401.3	63.0	Zeit. F.D.G. Turb., 5/30/'11
Brown Boveri & Cie.	Curtis-Parsons		5128	1000	171.2	565	28.52	0.726	14.35	17830	237.7	382.9	62.1	Stodola, 4th ed., p. 449
Breitfield, Danek & Co.	Impulse-Parsons	1909	3585	896	160.7	457	28.32	0.782	16.08	19070	212.0	352.4	60.2	Zeit. D.V.D. Ing., 12/10/'10
Brown, Boveri & Cie.	Parsons	1910	6257	1210	203.7	559	29.02	0.440	11.95	14980	285.5	415.0	68.8	Official Test Report
Allis-Chalmers	Parsons	1908	4300	1800	186.4	484	27.96	0.960	14.02	16690	243.4	355.7	68.4	Sibley Jour. of Eng., 1/11'
Brown Boveri & Cie.	Parsons	1903	3500	1360	156.4	499	28.84	0.532	13.71	16720	248.5	378.6	65.6	Zeit. D.V.D. Ing., 12/10/'10
Brown Boveri & Cie.	Parsons		3000	1360	165.0	625	27.02	1.120	14.75	18433	231.3	359.5	64.3	Die Turbine, 6/20/'11
C. A. Parsons & Co.	Parsons		5164	1200	214.3	509	28.95	0.473	13.18	16140	258.7	402.3	64.3	Stodola, 4th ed., p. 439
Allis-Chalmers	Parsons	1911	3850	1800	164.7	491	27.91	0.983	15.40	18410	221.3	348.3	63.5	Power, 1/2/'12
A. E. G.	Curtis-Rateau	1911	6518	1220	198.7	601	29.28	0.352	11.43	14640	298.4	434.2	68.7	Official Test Report
A. E. G.	Curtis-Rateau	1911	6565	1220	200.2	597	29.18	0.406	11.64	14848	293.0	427.7	68.5	Official Test Report
British Westinghouse	Curtis-Rateau	1911	5066	1500	190.2	552	28.68	0.649	13.00	16100	262.4	391.5	67.0	Electrical Review, 6/23/'11
M. A. N.	Curtis-Zoelly		3584	1500	178.3	569	27.54	1.166	13.99	17190	243.7	361.3	67.5	Data from Manufacturer
Bergmann	Curtis-Rateau	1909	1545	1500	188.5	581	28.59	0.654	12.97	16230	263.0	396.3	66.4	Zeit. D.V.D. Ing., 12/10/'10
Bergmann	Curtis-Rateau	1910	2477	1500	140.0	522	28.81	0.588	13.93	17135	244.8	373.4	65.6	Elec. Zeit., 4/20/'11
A. E. G.	Curtis-Rateau	1908	4239	1500	188.3	662	29.11	0.397	11.97	15620	284.9	439.0	64.9	Stodola, 4th ed., p. 404
British Westinghouse	Curtis-Rateau	1911	2930	1500	210.2	568	28.18	0.894	13.72	16935	248.7	383.3	64.9	Electrical Review, 4/28/'11
A. E. G.	Curtis-Rateau	1907	3169	1500	184.7	592	29.11	0.397	12.74	16230	267.7	425.1	63.0	Trans. A.S.M.E., vol. 32
M. A. N.	Curtis-Zoelly		2507	1500	175.5	460	27.40	1.234	16.24	19020	210.0	334.6	62.8	Data from Manufacturer
Bergmann	Curtis-Rateau	1909	1562	1500	186.8	555	28.33	0.780	14.57	17970	234.1	381.3	61.4	Data from Manufacturer
James Howden & Son	Zoelly	1909	6383	1000	202.7	520	27.33	1.269	14.305	17150	238.5	353.0	67.5	Engineer, London, 10/29/'09
M. A. N.	Zoelly	1910	1400	3000	180.7	554	27.40	1.237	14.21	17310	240.0	356.2	67.4	Zeit. D.V.D. Ing., 12/10/'10
Escher, Wyss & Co.	Zoelly	1910	2052	3000	193.9	585	28.39	0.750	13.04	16290	261.5	392.6	66.6	Zeit. F.D.G. Turb., 2/20/'11
Escher, Wyss & Co.	Zoelly	1910	4189	1000	179.7	557	28.66	0.618	13.30	16520	256.5	391.3	65.5	Zeit. F.D.G. Turb., 2/20/'11
F. Ringhoffer	Zoelly	1908	3000	1000	170.7	470	27.60	1.138	15.52	18278	219.8	339.2	64.8	Zeit. D.V.D. Ing., 12/10/'10
M. A. N.	Zoelly	1910	1250	3000	182.1	582	28.82	0.540	13.09	16500	260.2	404.5	64.4	Zeit. D.V.D. Ing., 12/10/'10
Oerlikon	Rateau	1911	3166	1500	213.9	663	29.25	0.367	11.44	14970	298.2	450.6	66.1	Engineering, 10/20/'10
Escher, Wyss & Co.	Zoelly		5118	1000	133.7	549	27.55	1.161	15.18	18530	224.6	341.6	65.7	Dinglers P.J., 7/15/'11
Escher, Wyss & Co.	Zoelly	1908	5000	1000	166.4	539	26.38	1.736	16.13	19350	211.2	330.4	63.9	Zeit. D.V.D. Ing., 12/10/'10
Escher, Wyss & Co.	Zoelly		3540	1500	155.1	469	28.21	0.838	15.07	17940	226.3	349.5	64.8	Dinglers P.J., 7/15/'11
Escher, Wyss & Co.	Zoelly	1910	1641	3000	221.0	672	27.91	0.985	13.08	16775	260.6	406.5	64.1	Zeit. F.D.G. Turb., 2/20/'11
Escher, Wyss & Co.	Zoelly	1910	1235	3000	176.8	451	28.39	0.750	15.35	18156	222.3	357.8	62.2	Zeit. F.D.G. Turb., 2/20/'11
British Thomson-Houston	Curtis	1911	2987	1500	154.7	505	26.75	1.557	15.96	18960	213.7	321.2	66.5	Engineering, 10/20/'11
Gen. Elec. Co.	Curtis		3464		210.0	513	28.75	0.575	13.62	16620	250.4	393.4	63.6	Trans. A.S.M.E., vol. 32
British Thomson-Houston	Curtis	1909	2500	1500	126.5	414	28.47	0.711	15.92	18590	214.0	336.1	63.7	Zeit. D.V.D. Ing., 12/10/'10
A. E. G.	Curtis	1906	3000	1500	191.3	590	29.05	0.427	12.79	16240	266.6	420.4	63.4	Zeit. D.V.D. Ing., 12/10/'10
A. E. G.	Curtis	1909	2236	1500	191.6	654	29.34	0.284	11.77	15450	289.8	455.8	63.6	Zeit. D.V.D. Ing., 12/10/'10
Gen. Elec. Co.	Curtis		8880		192.5	487	28.02	0.933	15.05	17065	226.7	359.5	63.1	Trans. A.S.M.E., vol. 32
British Thomson-Houston	Curtis	1911	1541	1500	149.7	365	27.97	0.956	17.46	19720	195.3	320.2	61.0	Engineering, 10/20/'11
Gen. Elec. Co.	Curtis		10816	750	190.0	525	29.39	0.260	12.90	16135	264.5	427.3	61.9	Trans. A.S.M.E., vol. 32
Gen. Elec. Co.	Curtis		5095		185.1	554	29.40	0.255	12.71	16090	268.4	436.0	61.6	Trans. A.S.M.E., vol. 32
British Thomson-Houston	Curtis	1911	1221	3000	134.7	448	27.16	1.353	17.75	20690	192.2	314.0	61.2	Engineering, 10/20/'11
Gen. Elec. Co.	Curtis	1910	8775	750	194.0	451	27.95	0.956	15.95	18720	213.8	350.8	61.0	Trans. A.S.M.E., vol. 32

References: Zeit. D.V.D. Ing.—Zeitschrift des Vereines Deutscher Ingenieure; Zeit. F.D.G. Turb.—Zeitschrift für das Gesamte Turbinenwesen; Dinglers P.J.—Dinglers Polytechnisches Journal; Elec. Zeit.—Electrotechnische Zeitschrift.

The Parsons low-pressure sections evidently utilize the heat in the steam only slightly more efficiently than do the impulse turbines. The great surface areas of all disk type turbines which must be whirled

Rateau types appear to use the steam more effectively in the low-pressure sections than the Curtis alone. Many European engineers hold the opinion that where high economy is to be obtained, the impulse turbine of the

Generated on 2024-09-29 23:42 GMT / https://hdl.handle.net/2027/uiug.30112007837674
Public Domain, Google-digitized / http://www.hathitrust.org/access_use#pd-google
Digitized by Google
Original from UNIVERSITY OF ILLINOIS AT URBANA-CHAMPAIGN

Rateau or Zoelly type is superior to the Curtis, though its manufacturing costs are higher. The Curtis-Rateau construction has all the commendable features of impulse turbines and has proved very economical.

The results shown in the table are from the best reliable tests that have been made on each type. Objection may be raised that these results do not represent actual operating conditions as under varying loads, nor the average economy of any type of turbine. For instance, the Curtis turbine usually gives a very flat water-rate curve, while the Parsons type is more convex. On the other hand, recent tests on the new Curtis-Parsons types have also shown flat water-rate curves at various loads. It was impossible to compare the various types from this standpoint on account of absence of complete data of such tests.

It is interesting to note in the table that the best results have been obtained within the past two years and that these show a considerable increase in efficiency over the earlier turbines.

Rate Fixing for Electric Public Service Properties

By GEORGE L. HOXIE

IN an address before the April meeting of the Engineers and Architects Association of Southern California, Mr. Hoxie discussed in detail one of the most difficult problems faced by engineers in charge of modern electric systems. Only a part of his interesting paper can be printed here.

Rate fixing, said Mr. Hoxie, is one of the newer engineering problems. It is true that rate-fixing commissions have been, and are, largely composed of lawyers, but the members of all of these commissions have found it necessary to rely principally upon their engineering experts, and it seems probable, as well as desirable, that the engineering profession will in the future have an increasing share in handling rate-fixing matters. It is therefore important that engineers should devote some attention to the problems of rate fixing.

Principles.—Rate fixing is designed to accomplish three objects: (1) that the people served by a public utility shall pay the lowest rate possible, consistent with efficient service and a proper return on the investment of the corporation; (2) that each class of consumers pay its proper proportion of the total revenues; (3) that there shall be no discrimination between individual consumers of any given class.

The third problem is not difficult. It is only necessary to pass laws forbidding discrimination and to see that those laws are not evaded. There is no difference of opinion as to the desirability of preventing discrimination, and there is little difference of opinion as to what constitutes discrimination.

The other two problems are very difficult. Taking up the first question, it must be determined primarily what is a 'proper return', and second, what constitutes 'investment.' The consumers served by a successful corporation can afford to pay, and should pay, annually a sum of money sufficient to cover: (*a*) the usual rate of interest on safe investments; (*b*) an additional sum to compensate for whatever special risk the business of the public utility may involve; and (*c*) such excess profits as are necessary to induce capital to engage in the business.

Item *a* is to be such a rate as may be paid by savings banks or yielded by high-grade bonds, that is, a rate that would be paid on money invested with practical safety and where the capitalist is not called upon to exercise much personal supervision over his investment after having once made it.

Item *b* will vary with the character of the business, the character of the community served, the length of time the utility has been established, the probability of future competition, etc. Item *b* may be as little as one per cent or it may be much more. For a settled utility, necessary to the community served, well and economically managed, and not unpopular with the general public, the special risks inherent in the business are small and are such as would be included in the possibility of strikes, either of workmen or of politicians, the possibilities of new inventions making parts of the plant obsolete, or change in the attitude of

Generated on 2024-09-29 23:47 GMT / https://hdl.handle.net/2027/uiug.30112007837674
Public Domain, Google-digitized / http://www.hathitrust.org/access_use#pd-google
Digitized by Google
Original from UNIVERSITY OF ILLINOIS AT URBANA-CHAMPAIGN

the public leading to hardship, or possible bad management or dishonesty in the future. It is hard to imagine a public utility that must not face these and similar possibilities, and therefore insurance should be provided against such possibilities, such insurance to take the form of a greater return than a savings bank or high-grade bond would make. The amount allowed must depend upon the judgment of the rate-fixing body, but must also be in line with integrated judgment of investors, expressed by the prices of stocks in similar public utilities as compared with the different rates of return on such stocks. It should be pointed out that the stability given by proper public supervision, which rate-fixing implies (such supervision, for example, as the state of Wisconsin and some other states now give to their public utilities) should, and in fact does, greatly diminish the risks of the business and therefore diminishes the rate that investors are willing to accept on stocks; or, otherwise expressed, operates to make public-service securities more marketable.

Item *c*, covering excess profits necessary to induce capital to engage in the business, is somewhat akin to item *b*, and in fact the two items might be combined, yet there are some real differences, and it has therefore been thought proper to include the third item, covering inducement. Capital is usually induced to engage in a business by a promoter. Item *c* may therefore be thought of as represented in part by promotion stock, or by the earnings of promotion stock. Usually, however, at least in the case of those few public-service enterprises that are initially of considerable size, the inducement of the promoter's eloquence is not sufficient. The capitalist will not enter such an enterprise unless there is a real money inducement (or a reasonable expectation of such inducement) in excess of ordinary interest plus proper payment for risk. It must be remembered that the actual risk run by the capitalist, as measured by a cold-blooded commission after the enterprise has been successfully established, and the apparent risk as it first appears to the timid capitalist at a time when the whole project exists only in the brain of the promoter, are two very different things. If, then, the enterprise be one that the public needs, the public must be prepared to pay an inducement. This inducement may be in the form of a moderate return on stock partly water, or larger return on net investment, but it must appear to the capitalist to be reasonably certain or he will not engage in the business. The size of the necessary inducement must be a matter for the judgment of the commission. Public policy demands that it be as small as possible, but public policy also demands that full faith be kept with the capitalist in the matter of payment after he is fully committed and is helpless. The present tendency in some states is to cut down 'inducement' to the point where many desirable enterprises cannot be financed. If similar rules applied all over the world, capital would be forced to accept them. As it is, capital is very nimble, and goes where it can do best for itself. It follows that stagnation sometimes comes to a community as a result of actions taken with the best possible motives, and perhaps perfectly desirable and politic actions, could they only apply the world over.

Franchise Value.—In most rate-fixing investigations the franchise itself is not permitted to be regarded as an investment on which earnings are made. This is not necessarily the case, however, as it frequently costs money to get a franchise, and the terms of the franchise frequently involve an annual expense to the company. For example, it is not uncommon for an electric lighting company, as a condition of its franchise, to engage to supply electricity to various public buildings free of charge, or the company may as a condition of its franchise engage to perform street lighting at an especially low rate. Where any of these elements are found the franchise represents either a real legitimate initial expenditure or a constant annual expenditure, and in either case the franchise may reasonably be regarded as capital on which revenues must be earned. In the latter case the expenditures may with equal justice be charged instead as operating expenses, if for any reason this is preferred as a matter of bookkeeping.

Going Value.—It is obvious that a completely equipped utility company ready to operate, but having no customers, has a different value from the same utility a little later when we may assume that its total product is being sold at a remunerative figure. The difference in value between a com-

Generated on 2024-09-29 23:43 GMT / https://hdl.handle.net/2027/uiug.30112007837674
Public Domain, Google-digitized / http://www.hathitrust.org/access_use#pd-google
Digitized by Google
Original from UNIVERSITY OF ILLINOIS AT URBANA-CHAMPAIGN

pany without customers and the same company under full operation may reasonably be considered as represented by the cost of establishing the business. This sum is represented by early losses, or by the failure to earn proper profits, in the early years of operation. Some caution is necessary in arriving at a figure for 'going value' on this basis, and it cannot be contended that an unsuccessful company, or a company which was not needed by the community when it was put in operation, should be permitted to capitalize losses over a long period of years, even though such losses in fact occurred. It is assumed in the discussion up to the present point that we are dealing with successful, or reasonably successful, utilities, and it may be readily seen that except in very rare instances even the most successful public utility must spend time and money in creating business. Such expenditures are really necessary costs, paid in money or its equivalent, and worth money or its equivalent, and therefore are legitimate items going to make up 'investment.'

Depreciation.—There is a wide difference of opinion as to proper methods of figuring depreciation and even as to what constitutes depreciation. It is not my intention to consider the matter of depreciation in detail. It will therefore be assumed that depreciation is figured on a straight line basis, using the assumed useful life of the various items making up the total investment as a basis for determining the yearly charge against each item to cover depreciation. It is also assumed that depreciation has only one value at a given moment for a given item. The items of cost of franchise, if any, and the costs of general engineering, superintendence, insurance, law, promotion, going value, etc., should be subject to a depreciation charge as well as are the items covering actual physical property. This means, of course, that such intangible costs as those just enumerated are to be written off, or amortized, in the course of time. Such costs are assumed to be incurred but once, and when fully paid back from a depreciation fund it may logically be assumed that they have been written off and removed from the capital account. The application of depreciation to intangible items of this sort may be justified logically on theoretical grounds, but without entering upon any theoretical discussion, it will probably be generally conceded that as a practical matter it is advisable to amortize intangible costs when, and as soon as, possible.

Supervision.—The rate-making body should have supervision over the accounting and bookkeeping in connection with expenditures from any fund collected for the purpose of balancing depreciation. A well managed corporation should have the fullest power to decide upon such expenditures, since the officers of the corporation, if competent, will ordinarily be in a better position to form correct judgment of how money should be spent than will any supervising commission. The fund, in the discretion of the corporation's officers, should be permitted to be used for replacing worn-out machinery or buildings, for buying needed real estate for the future, for building entirely new plants, extending lines, or in such other legitimate expenditures as the officers in charge may deem most beneficial to the corporation's present and future business. The only restriction on such expenditures should be merely such as will satisfy the commission that wise judgment is being exercised.

The bookkeeping in connection with depreciation expenditures should be wholly under the control of the commission, in order that it may be made certain that no part of the plant, built with depreciation money, is capitalized, even though the depreciation fund proves in the course of several years to have been larger than was really necessary. This, of course, applies to additions made under regulation and not to additions made out of surplus earnings before the advent of rate regulation. It has been suggested that a competent commission would revise the depreciation allowances from year to year, so as to keep the fund in the long run close to the exact equivalent of the depreciation that has occurred. This is one of those things that look easy, but in fact are practically impossible to carry out. If the depreciation allowed be too large to begin with, it is likely to continue so, and if the fund may be invested in new construction it must be under the general supervision of the rate-making commission, or injustice to the public is likely to result.

Basis of Rates.—In my opinion the revenue collected should be based ultimately upon the 'present value' (reproduction cost, less straight-line depreciation) of all physical and non-physical items of property nec-

Generated on 2024-09-29 23:44 GMT / https://hdl.handle.net/2027/uiug.30112007837674
Public Domain, Google-digitized / http://www.hathitrust.org/access_use#pd-google
Digitized by Google
Original from UNIVERSITY OF ILLINOIS AT URBANA-CHAMPAIGN

essary to the service sold. The revenue should be sufficient to cover operating expenses, depreciation charges, and income upon 'present value.' It would seem at first sight that if an agreement could be once reached the total revenue to be collected, the rate problem would be practically solved. Such is by no means the case. It is hardly too much to say that some of the hardest problems still remain.

In regard to classes of service, it will almost invariably be found that the public has no proper conception of the necessary difference in cost per kilowatt-hour between supplying a householder with lighting current, say to the amount of 20 to 30 kw-hr. per month, current being delivered around 100 volts and the current measured being used a short time per day while an unmeasured all-day loss goes on in the customer's individual transformer; and the cost per kilowatt-hour of supplying say 500,000 kw-hr. per month, at say 10,000 volts, to a railway company. Of course, it will be generally admitted that there must be a reasonable difference between wholesale and retail price, but one continually finds a comparison being made between the prices of coal and electricity at wholesale and retail; and in communities where the water-supply is metered the difference between the wholesale and retail price of a cubic foot of water is always brought into the argument. It is maintained by some, and to most people seems plausible, that the wholesale and retail ratio in the case of electricity should not be very different from the wholesale and retail ratio in the case of coal or water. It is rarely pointed out, however, that a company is fairly lucky if a kilowatt-hour at 100 volts, measured inside a customer's residence, does not mean pretty nearly two kilowatt-hours measured back on the high-tension line.

I incline very much toward putting residences using current mainly for lighting into a single class. Let us say that the shape of the daily load curve is about the same for all such customers. Let us then determine as closely as possible the average actual cost to the company of making and maintaining a connection to a residence, including interest and depreciation on that equipment used solely by one customer and not available for any other customer. Then let us include the cost of bookkeeping, meter reading, etc., and possibly including the cost of magnetizing current. Then let each customer's bill have printed on it this sum as a 'connection charge,' irrespective of whether any current be consumed inside the house or not. The usual 'minimum charge' may be eliminated, the cost per kilowatt-hour lowered a little, and the customer may buy, and pay for, as little as a single kilowatt-hour or as much as he likes. With this system it really makes but little difference in the cost to the company per kilowatt-hour whether the customer uses 10 or 100 kw-hr. per month. It is fair to say that the idea of a 'connection charge' does not always appeal to the public, but if it is best, probably the public can be educated to accept it. The use, on the other hand, of schedules based on 'connected load' or on 'active rooms' are of advantage only in case the shape of the load curve can be changed by their use, or in case the use of current for other than lighting purposes can be considerably increased. It would be of interest to know just what effect the use of these two systems, where they are in use, has had on the shape of the load curve or the average householder.

For a householder whose use of electricity is not mainly for lighting, it now seems to be the general practice to install a second meter and charge a different rate. It is quite possible that in the future such customers may be given a combination of a maximum-demand meter with a two-rate clock-controlled meter. If a correct and simple system of charging could be introduced that would lead customers generally to use current for refrigeration, electric cooking, etc., and would also insure that current was not used for such purposes during the peak-load hours, the result would be greatly to the advantage of all. The weak point of all systems that simply encourage consumption is that the increased consumption in some part, and perhaps in large part, may be at the extreme peak for the plant.

When we leave the field of residence supply and consider the proper charge for the almost innumerable other uses of electricity, we find that it is customary to divide industries into classes, and to make one rate say for laundries, another rate for brickyards, another rate for planing mills, and so on. For a planing mill where steam is useful for treatment of material, and where

Generated on 2024-09-29 23:43 GMT / https://hdl.handle.net/2027/uiug.30112007837674
Public Domain, Google-digitized / http://www.hathitrust.org/access_use#pd-google
Digitized by Google
Original from UNIVERSITY OF ILLINOIS AT URBANA-CHAMPAIGN

there is enough refuse wood to be disposed of so that fuel may cost little or nothing, the rate is likely to be very low. The rate for an apartment house is sometimes considerably lowered if the owner has an isolated plant ready for use. It is still a very serious question just what classes of business should have separate rates and what those rates should be.

It seems to me that the effort in apportioning charges among various classes of consumers should be to make each class pay as nearly as possible the same rate of return to the company on such part of the company's plant and working staff as serves the particular class considered. Proper weight, however, must be given to the value of the service to the consumer, and to the price that the consumer can afford to pay. Certain classes of users may be able to pay more than other classes for a kilowatt-hour consumption that may cost the company the same in either case. Such differences in value of service should be considered, as well as differences in cost to supply service. I also believe that, generally speaking, too much attention is given to the total consumption is kilowatt-hours, and too little attention is given to load factor, and especially to the shape of the load curve, and that far too little attention is given to classes of load that may exist, or may be developed, and may be kept almost wholly off peak. It should be noted that a customer with an irregular load curve, but who is wholly off peak, will probably be more desirable, at least on an extensive system, than a customer with 100% load factor.

Interpretation of Cement Tests

THE U. S. Bureau of Standards has issued Bulletin No. 33, covering U. S. Government specifications for portland cement, including specification, standard method of testing, methods of chemical analysis, investigation of results, and auxiliary specifications. The following abstract will be of interest to both users and manufacturers of cement.

Chemical Analysis.—The composition of normal portland cement has been the subject of a great deal of investigation, and it can be said that the quantities of silica, alumina, oxide of iron, lime, magnesia, and sulphuric anhydride can vary within fairly wide limits without materially affecting the quality of the material. A normal American portland cement which meets the standard specifications for soundness, setting time, and tensile strength has an approximate composition within the following limits:

	Per cent.
Silica	19.0 to 25.0
Alumina	5.0 to 9.0
Iron oxide	2.0 to 4.0
Lime	60.0 to 64.0
Magnesia	1.0 to 4.0
Sulphur trioxide	1.0 to 1.75
Loss on ignition	0.5 to 3.00
Insoluble residue	0.1 to 1.00

It is also true that a number of cements have been made both here and abroad which have passed all standard physical tests in which these limits have been exceeded in one or more particulars, and it is equally true that a sound and satisfactory cement does not necessarily result from the above composition. It is probable that further investigation will give a clearer understanding of the constitution of portland cement, but at present chemical analysis furnishes but little indication of the quality of the material.

Defective cement usually results from imperfect manufacture, not from faulty composition. Cement made from very finely ground material, thoroughly mixed and properly burned, may be perfectly sound when containing more than the usual quantity of lime, while a cement low in lime may be entirely unsound, due to careless manufacture. The analysis of a cement will show the uniformity in composition of the product from individual mills, but will furnish little or no indication of the quality of the material. Occasional analyses should, however, be made for record and to determine the quantity of sulphuric anhydride and magnesia present.

The ground clinker as it comes from the mill is usually quick setting, which requires correction. This is usually accomplished by the addition of a small quantity of more or less hydrated calcium sulphate, either gyp-

Generated on 2024-09-29 23:42 GMT / https://hdl.handle.net/2027/uiug.30112007837674
Public Domain, Google-digitized / http://www.hathitrust.org/access_use#pd-google
Digitized by Google
Original from UNIVERSITY OF ILLINOIS AT URBANA-CHAMPAIGN

sum or plaster of paris. Experience and practice have shown that an addition of 3% or less is sufficient for the purpose. Three per cent of calcium sulphate ($CaSO_4$) contains about 1.75% sulphuric anhydride (SO_3), and as this has been considered the maximum quantity necessary to control the time of set, the specification limits the SO_3 content to 1.75 per cent.

The specification prohibits the addition of any material subsequent to calcination except the 3% of calcium sulphate permitted to regulate time of set. Other additions may be difficult or impossible to detect even by a careful mill inspection during the process of manufacture, but as the normal adulterant would be ground raw material, an excess of 'insoluble residue' would reveal the addition of silicious material, and an excess in 'loss of ignition' would point to the addition of calcareous material when either is added in sufficient quantity to make the adulteration profitable.

The effect of relatively small quantities of magnesia (MgO) in normal portland cement, while still under investigation, can be considered harmless. Earlier investigators believed that as magnesia had a slower rate of hydration than lime, the hydration of any free magnesia (MgO) present would occur after the cement had set and cause disintegration. The effect of magnesia was considered especially injurious when the cement was exposed to the action of sea water. More recent investigation has shown that cement can be made which is perfectly sound under all conditions when containing 5% of magnesia, and it has also been found that the lime in portland cement exposed to sea water is replaced by magnesia. The maximum limit for magnesia has been set at 4%, as it has been established that the quantity is not injurious and it is high enough to permit the use of the large quantities of raw material available in most sections of the country.

Specific Gravity.—If the Le Chatelier apparatus is used for the determination of specific gravity, the clean volumenometer flask is filled with benzine free from water (which can be obtained by placing some calcium chloride or caustic lime in the benzine storage jar) to a point on the stem between zero and 1 c.c. The flask is then placed in a constant temperature bath until volume is constant. The usual method is to introduce 64 gm. of cement in the flask, taking care that the powder does not adhere to the tube above the liquid, and to free the cement from air by rolling the flask in an inclined position. The flask is then replaced in the constant temperature bath until a constant volume is recorded.

The specific gravity is obtained from the formula:

$$\text{specific gravity} = \frac{\text{weight of cement in grams}}{\text{displaced volume in c.c.}}$$

The specific gravity of a portland cement is not an indication of its cementing value. It will vary with the constituents of the cement, especially with the content of iron oxide. Thus the white or very light portland cements, containing only a fraction of a per cent of iron oxide, usually have a comparatively low specific gravity ranging from 3.05 to 3.15, while cement containing 3 to 4% or more of iron oxide may have a specific gravity of 3.20 or even higher. It is materially affected by the temperature and duration of burning the cement, the hard-burned cement having the higher specific gravity. A comparatively low specific gravity does not necessarily indicate that a cement is underburned or adulterated, as large percentages of raw materials could be added to a cement with a normally high specific gravity before the gravity would be reduced below 3.10. If a portland cement fresh from the mill normally has a comparatively low specific gravity, upon aging it may absorb sufficient moisture and carbon dioxide to reduce the gravity below 3.10. It has been found that this does not appreciably affect the cementing value of the material; in fact, many cements are unsound until they have been aged. Thus a redetermination is permitted upon a sample heated to a temperature sufficient to drive off any moisture which might be absorbed by the cement subsequent to manufacturing, but would not drive off any carbon dioxide nor correct underburning in the process of manufacturing the cement.

The value of the specific gravity determination lies in the fact that it is easily made in the field or laboratory, and when the normal specific gravity of the cement is known, any considerable variation in quality due to underburning or the addition of foreign materials may be detected.

Fineness.—Only the extremely fine powder

Generated on 2024-09-29 23:41 GMT / https://hdl.handle.net/2027/uiug.30112007837674
Public Domain, Google-digitized / http://www.hathitrust.org/access_use#pd-google
Digitized by Google
Original from UNIVERSITY OF ILLINOIS AT URBANA-CHAMPAIGN

of cement called flour possesses appreciable cementing qualities and the coarser particles are practically inert. No sieve is fine enough to determine the flour in a cement, nor is there any other means of accurately and practically measuring the flour. Some cements grind easier than others, and, although a larger percentage of one cement may pass the 200-mesh sieve than another, the former may have a smaller percentage of actual flour due to the difference in the hardness and the character of the clinker, and the method used in grinding. Thus the cementing value of different cements can not be compared directly upon their apparent fineness through a 200-mesh sieve. With cement from the same mill, with similar clinker and grinding machinery, however, it is probable that the greater the percentage which passes the 200-mesh sieve the greater the percentage of flour in that particular cement.

Normal Consistence.—The quantity of water used in making the paste from which the pats for soundness, tests of setting, and the briquettes are made, is very important and may vitally affect the results obtained. The determination consists in measuring the quantity of water required to bring a cement to a certain state of plasticity. In determining the normal consistence by the ball method, after mixing the paste it should be formed into a ball with as little working as possible and a new batch of cement should be mixed for each trial paste. In order to obtain just the requisite quantity of paste to form a ball 2 in. diameter, a measure made from a pipe with a 2-in. inside diameter cut 1½ in. long will be found convenient.

The section of pipe should be open at both ends, so that it can be pushed down onto the paste on the mixing table and the excess paste cut off with the trowel.

Mixing.—The homogeneity of the cement paste is dependent upon the thoroughness of the mixing, and this may have considerable influence upon the time of setting and the strength of the briquettes.

Soundness.—The purpose of this test is to detect those qualities in a cement which tend to destroy the strength and durability. Unsoundness is usually manifested by a change in volume which causes cracking, swelling, or disintegration. If the pat is not properly made, or if it is placed where it will be subject to any drying during the first 24 hours, it may develop what are known as shrinkage cracks, which are not an indication of unsoundness and should not be confused with disintegration cracks. No shrinkage cracks should develop after the first 24 or 48 hours. The failure of the pats to remain on the glass or the cracking of the glass to which the pat is attached does not necessarily indicate unsoundness. In molding the pats, the cement paste should first be flattened on the glass and the pat formed by drawing the trowel from the outer edge toward the centre.

Time of Setting.—The purpose of this test is to determine the time which elapses from the moment water is added until the paste ceases to be plastic and the time required for it to obtain a certain degree of hardness. The determination of the 'initial set' or when plasticity ceases is the more important, as a disturbance of the material after this time may cause a loss of strength and thus it is important that the mixing and molding or the incorporating of the material into the work be accomplished within this time. The time of setting is usually determined upon one of the pats which is to be used for the soundness test, the top surface being flattened somewhat. In using the Gillmore needles care should be taken to apply the needles in a vertical position and perpendicular to the surface of the pat. The rate of setting and hardening may be materially affected by slight changes in temperature. The percentage of water used in gauging and the humidity of the moist closet in which the test pieces are stored may also affect the setting somewhat.

Tensile Tests.—Consistent results can only be obtained by exercising great care in molding and testing the briquettes. In testing, the sides of the briquette and the clips should be thoroughly cleaned and free from grains of sand or dirt which would prevent a good bearing, and the briquette should be carefully centred in the clips so as to avoid cross strains. It may be considered good laboratory practice if the individual briquettes of any set do not show a greater variation from the mean value than 8% for sand mixtures and 12% for neat mixtures.

Generated on 2024-09-29 23:44 GMT / https://hdl.handle.net/2027/uiug.30112007837674
Public Domain, Google-digitized / http://www.hathitrust.org/access_use#pd-google
Digitized by Google
Original from UNIVERSITY OF ILLINOIS AT URBANA-CHAMPAIGN

The Twin Peaks Tunnel

By BION J. ARNOLD

IN a report submitted to the Board of Supervisors, on May 3, on the various tunnel projects under consideration for the improvement of street railway traffic conditions in the city of San Francisco, Bion J. Arnold recommends a low-level trolley bore from Market street to the San Miguel tract, with a maximum tunnel or approach grade of not over 3% if for any considerable length, the alignment to be as direct as possible and practically constituting an extension of the Market street thoroughfare into the Merced district.

Provision for a Market street subway, he says, should be incorporated in any Twin Peaks project; that is, the alignment and grade of the tunnel under the hill should be such as to emerge directly into a suitable subway bore under Market street, whether the latter is built now or in the future. If the cost is too great at present for a subway section, build the Twin Peaks tunnel to sub-grade, with inclined portal at the south end of Market street, so that cars may easily reach the surface, and in the future the tunnel sub-grade can be extended north into the subway proper. Continuing, Mr. Arnold says:

If the assessment burden is not too heavy at this time, I am in favor of the use of Valencia street as the present northern terminus of this tunnel-subway project. The tunnel through the hill may be a 19 or 20-ft. arched roof bore of such design as to secure the maximum economy; but under Market street, a flat roof section should be used, suitable for third-rail operation, and enlarged sufficiently to permit of trolley operation for the time being, but not over 15 ft. in the clear, with station platforms situated not exceeding 15 ft. below the street surface. North of Valencia street, a third-rail flat-roof bore should be contemplated for the future, about 14½ ft. high in the clear. This northern section of the third-rail bore will merge into the southern or combination section, following the gradual ascent of Market street. Assuming the terminal at Valencia street, the traffic may be effectively handled as follows:

Interurbans to be equipped with third-rail contact and routed direct to Valencia street underground, thence down Mission street on the surface.

Suburban expresses to be routed the same as interurbans, using trolley to Valencia street. Suburban locals to emerge at Castro, thence *via* Market street surface to the Ferry (or *via* Mission street). Surface feeder lines to enter the incline at Castro street, returning by an underground loop.

In the event of the extension of the subway to the Ferry, the entire subway bore will be available for both third-rail interurbans and subway locals, the suburbans being routed out of the bore at Castro or Valencia street, and the subway locals returning *via* underground loop at Castro street. To meet future necessities, additional tracks for express service exclusively should be provided for, in the acquisition of property rights for the tunnel now under consideration. For this purpose, the most direct alignment and lowest grade obtainable are desirable. This need not necessarily coincide with the one chosen to meet present necessities.

Alternative.—Should your Board be in agreement with me regarding the strategic importance of the Seventh avenue extension south of the Park by Laguna Honda and the City tract contiguous thereto, and the corresponding necessity of a subway transfer station for passengers and cars at this point, I would be strongly inclined to recommend to you the No. 5B plan, following the Market street contour "with Seventh avenue connection", even at the expense of a somewhat greater tunnel grade and a less perfect alignment. In the appended discussion, I have given you the measure of these disadvantages, neither of which in my opinion is at all serious. This plan would subdivide a tunnel 16,000 ft. in length from portal to portal into three parts, with surface entrances not over 8900 ft. apart. The direct extension of the Market street alignment from Castro to Douglass street is in my judgment quite impracticable, as it seriously disturbs the present gradients in this region and by shortening the main tunnel grade between stations at Market street and Lake Honda will actuall increase this grade beyond the 3% maximum established.

Generated on 2024-09-29 23:44 GMT / https://hdl.handle.net/2027/uiug.30112007837674
Public Domain, Google-digitized / http://www.hathitrust.org/access_use#pd-google
Digitized by Google
Original from UNIVERSITY OF ILLINOIS AT URBANA-CHAMPAIGN

However, the curved extension plan No. 5B could be carried out to advantage as an independent street improvement, coincidental with the tunnel construction at sub-grade, although not essential thereto, as I believe the sub-grade bore necessary in any event. The only gain so far as the Twin Peaks tunnel is concerned would be to eliminate damages and facilitate construction by the open-cut method. This contour approach will be of maximum benefit as an outlet for the 'Mission-Sunset' tunnel proposed herein, and the cost of the extension should be considered as partly borne by the saving in the length of the Mission-Sunset bore.

If the Twin Peaks tunnel is built according to plan No. 5B—that is, following a curved extension of Market street at sub-grade—I believe that the Mission-Sunset tunnel should extend from the surface of Market at Eureka street to Frederick and Cole streets in Pope valley, with a transfer station at Eureka street to enable passengers to reach Golden Gate park from either direction. This tunnel should be of a type providing for street-car, vehicle, and pedestrian traffic, as already laid out for the Fillmore street or Broadway tunnels. It should be considered as an important feeder to the Twin Peaks bore from the Panhandle district, to be constructed as soon thereafter as practicable. If Market street is not extended as contemplated in plan No. 5B, the Mission-Sunset tunnel must then be lengthened over 27%, with an easterly portal at Sixteenth and Market streets, in all probability; this, however, being dependent to some extent upon future plans for surface line extensions. Finally, I can recommend unqualifiedly the construction of a Twin Peaks rapid transit tunnel at the earliest date. If possible, this should be done simultaneously with the Harbor View projects I have previously reported upon, some of which I regard as essential to the success of the Exposition. In so doing, there will be brought within 30 minutes running time of the business district approximately 10,000 acres of new territory, 75% of which is suitable for residence land, that has been practically useless heretofore by reason of lack of adequate transportation thereto. This area extends west to the ocean front and south along the valley as far as the cemeteries. This estimate is based upon present operating schedules. But with higher speed equipment, even this is capable of great improvement, and it is quite possible that the valley lands could be brought within the 30-minute zone at least half way to San Mateo.

In considering these various tunnel enterprises under Twin Peaks, it has been the general object to provide a low-grade outlet from Market street into the San Miguel Rancho, for the purpose of giving direct access to the business district *via* Market and Mission streets for suburban surface cars from the lower Sunset district, San Miguel, Ingleside, Merced, and Ocean View (that is, extending the suburban commuter area well beyond the county line into the peninsula valley lands) and providing a more direct and convenient rapid transit entrance to the city from down the peninsula than is at present afforded by the Mission-street thoroughfare. There is no question in my mind that in order to attain the fullest and most desirable development of the large tracts of desirable residence territory in the southwestern section of the city, the Twin Peaks ridge must be pierced by one or more tunnels, and, in my judgment, this entire territory will remain largely undeveloped until some such project introduces more rapid transportation into this district.

The present ambition of the city of San Francisco is to enlarge its habitable areas, but the desirable areas now available for home-seekers are extremely limited under present transportation facilities. Even were San Francisco to extend its municipal boundaries into San Mateo county, there would still remain the demand for better transportation for the suburban residents and commuters, without which such expansion would be to no great purpose. In analyzing the movements of the commuter population, it is generally found that the criterion by which one suburban district is judged as against another, rests entirely upon the question of time consumed in transit and in the convenience and attractiveness of the route. Roughly speaking, 30 minutes represents the limit set by the average suburbanite in his choice of location. If more time is consumed, he is apt to seek more rapid and convenient lines of transportation, even though a much greater distance must be covered each day. Frequently, geographical conditions conspire to render a longer trip necessary, but often the attractiveness of the trip operates largely

Generated on 2024-09-29 23:43 GMT / https://hdl.handle.net/2027/uiug.30112007837674
Public Domain, Google-digitized / http://www.hathitrust.org/access_use#pd-google
Digitized by Google
Original from UNIVERSITY OF ILLINOIS AT URBANA-CHAMPAIGN

in extenuation of the longer ride; such is the case with the transbay commuters.

The first problem, then, to which San Francisco should apply itself is the utilization of the habitable land already within its borders, which is rendered extremely desirable by reason of its unobstructed view of the broad Pacific. In this respect, the Twin Peaks tunnel becomes a real necessity. I have not yet the exact data at hand for determining the distribution of sleeping population on the peninsula, but general observation confirms the view that, excepting Richmond, the Sunset district, and the Lake Merced region contiguous thereto constitute the only land within the municipal boundaries capable of immediate and extensive development such as will be necessary to absorb and preserve the continued growth of the city in proper relation to the other surrounding communities tributary thereto. The extraordinary development across the bay is a sufficient object lesson in the possibilities of development by limited-stop rapid transit trains, and I need not comment upon this further, except to fully concur in the expressed desire of your Mayor to bring about such a method of transportation down the peninsula. The result would be to immediately extend the 30-minute time zone, figured from the business centre, from its present limit to perhaps half way to San Mateo.

It has been contended that a double-bore tunnel, suitable for both rapid transit and vehicle traffic, should be provided; but owing to the extreme length of the tunnel, the latter has been practically abandoned, and the various projects are here analyzed on the bases above enumerated. In studying these various propositions, certain important features command instant attention; first and foremost, the grade. If it is the desire of the city to extend south along the peninsula through the agency of high-speed electric train service, a rapid-transit entrance into the city from the south must be provided. For this reason, steep grades in tunnel or approaches and obstructed and circuitous routes are practically out of the question. These conditions practically dictate a low-level location.

On the other hand, the drilling of a high-level tunnel, from the upper end of Market street extended through the Almshouse tract to Seventh Avenue boulevard or Laguna Honda, would unquestionably provide vastly improved surface transportation to the Sunset district, but would not provide a rapid-transit route at all adequate for the purposes above discussed.

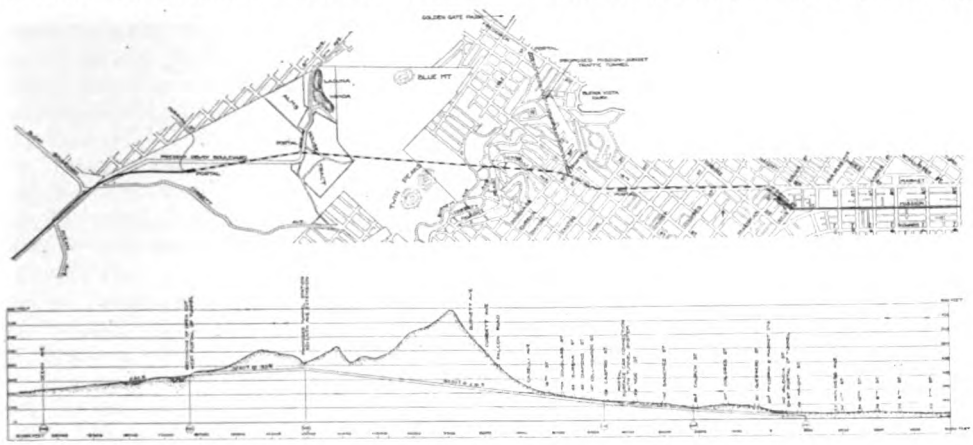

No. 5B. PLAN AND ELEVATION, TWIN PEAKS TUNNEL PROJECT.

It is, therefore, a matter subject to the judgment of your Board which of the two methods of transportation is to exercise control in establishing the grade of the Twin Peaks tunnel. In the following I shall discuss certain facts which must necessarily offer guidance in reaching proper conclusions. Unquestionably, the general desire of San Franciscans is for a direct extension on the Market street alignment toward Merced, for it appears to be on this score that the otherwise excellent plan developed by an engineer of your city, Hermann Schussler, was not widely favored—that is, on account of the diversion, from a direct align-

Generated on 2024-09-29 23:42 GMT / https://hdl.handle.net/2027/uiug.30112007837674
Public Domain, Google-digitized / http://www.hathitrust.org/access_use#pd-google
Digitized by Google
Original from UNIVERSITY OF ILLINOIS AT URBANA-CHAMPAIGN

ment, through Blue mountain. The underlying feature of this plan, however, was one of economy and expediency—accomplishing by a single bore the object of two tunnels now contemplated. Furthermore, the alignment under Seventeenth street was chosen to confine the damages to one large property-holder whose acquiescence had been previously secured, thus avoiding the interminable delays usually encountered in adjudicating the claims of numerous small property-holders in the acquisition of sub-surface easements. The loss of time occasioned by this diversion from the direct alignment would not be at all serious, especially with grades not exceeding 3%; but if both tunnels—that is, Twin Peaks and Mission-Sunset—are desired, and the construction funds therefor can be raised by the property benefited thereby, an approximate alignment with Market street unquestionably becomes the more desirable from an operating standpoint. Collectively, the status of these various projects is greatly affected by the attitude of the city in regard to the extension of Market street through the four intervening blocks to Douglass street. It has been urged that with this extension a considerable length of tunnel would be saved and with it the necessity of running underground to Valencia street. It is true that, were this improvement already carried out, a strong argument would be presented for a surface grade entrance at Douglass. However, as this has not been done, the following conditions prevail:

The cost of acquiring property to extend Market street as above indicated is considerable. An estimate before me, which was made by a reliable real estate firm of your city, shows that the cost would be in the neighborhood of $525,000, exclusive of the cost of land and damage at the northwest corner of Seventeenth and Castro streets.

The extension of Market street in this manner will not permit the extension of plans combining a subway entrance on the north and a sub-grade entrance at Laguna Honda, within the limitations of grade established—3%. Eventually, a Market street subway will without doubt become a necessity, and it will then become equally necessary to route the rapid-transit suburban express trains from the Twin Peaks tunnel into this subway, for which purpose an inclined entrance would have to be provided in the street from surface to sub-grade at some point along Market street or else by a diverging grade within the tunnel, which has some operating disadvantages. But a study of the Market street profile shows that an incline to sub-grade will be difficult to provide south of Church street, owing to the street's general slope in the same direction as the tunnel grade, and to the short distance between cross streets in the proposed extension strip. Thus, electric express trains would be forced to run along the surface of Market street for 14,000 ft. before dipping underground, which would defeat to a large degree the ends of rapid transit desired.

A study of regrades of lateral streets necessary to carry out the extension of Market street reveals a hopeless disturbance of the already steep grades in the Eureka valley. On a comparatively level territory these regrades could be accomplished without difficulty, but with existing grades of 5 to 8%, it is impossible to cut through a diagonal thoroughfare 120 ft. in width without practically closing some of the streets to the right and left. This results from the fact that the blocks of realty are so cut up into small irregular polygons that not only do lateral grades become prohibitive, but the efficient utilization of the remaining areas is to a large degree destroyed.

Further, it is found that a straight extension would carry Market street to the foothills without any opportunity of connection with other thoroughfares providing an outlet from Eureka valley along reasonable grades to the higher levels. Caselli avenue, beginning at the southerly extremity of the extension, is narrow and immediately encounters ascending grades prohibitive for either automobiles or street-cars. Douglass and Eureka streets both present impossible grades to the south, thus leaving the westerly ascent in precisely the same condition as at the present time.

A contour plan of extension, however, will prove far more practicable. In developing the alignment of the tunnel sub-grade, points were located around the southerly slope of Buena Vista hills where the sub-grade could be located 20 ft. below the surface. This alignment was found to approximate the desired route to Laguna Honda station under alternative plan No. 5B, with Seventh avenue connection. This immediately suggested the proper location for an easy grade exten-

Generated on 2024-09-29 23:59 GMT / https://hdl.handle.net/2027/uiug.30112007837674
Public Domain, Google-digitized / http://www.hathitrust.org/access_use#pd-google
Digitized by Google
Original from UNIVERSITY OF ILLINOIS AT URBANA-CHAMPAIGN

sion of Market street into Eureka valley at a uniform grade of 3%, the same as the subway running beneath its surface. Leaving the present intersection of Seventeenth and Castro streets, the Market street roadway has been gradually drawn down on the curve to the width of 85 ft., the lines being drawn in so gently as to make the reduction unnoticeable. This width of street is considered sufficient for Eureka valley and is somewhat in excess of California street, Devisadero street, and Broadway. The extension reaches Eureka street at 3% average grade, and may be carried still farther up the hill to Eighteenth street on about a 5% grade if desirable, thence reaching by Falcon avenue the present secondary level to the south around Twin Peaks and to the north over Ashbury Heights. For this extension 60-ft. width would probably serve the purpose in view and least disturb existing gradients.

At Eureka street it is proposed to construct the southern portal of the Mission-Sunset tunnel to Pope valley, with a diagonal portal passing under Seventeenth street and Douglass which is the beginning of Corbett Road, the high-level boulevard around Twin Peaks. Moreover, if it is determined to terminate the extension at Eureka street, a surface car entrance portal into the subgrade beneath can be placed so as to pass under Ord street with a slight regrade of the latter. The plan will then present the following features:

A 3% grade from Castro to the portal of the Mission-Sunset tunnel.

The present gradients of transverse streets lying to the south of the extension would be undisturbed. Those on the north would be somewhat increased, but the resulting depths of the lots would be such as to permit convenient frontage on both Market and Seventeenth streets, even at the different levels.

The plots of realty would be cut up into nearly rectangular areas without disturbance of present corner lots, except at the curve south of Castro.

A subway station at the Eureka street portal would provide transfer facilities in both directions between the subway lines, Market street and Sunset lines, and with Eighteenth street by a walk of 200 or 300 feet.

A high-level entrance to Market street for local trolley cars from the south.

A 3% grade extension to both the present boulevard levels around Twin Peaks—Corbett Road and Falcon-Ashbury avenues—suitable for direct car-line connections with Market street. Many of the details of this extension must be worked out further, but the contour plan is well suited to the general scheme of Twin Peaks development. However, this is to be regarded as a street improvement and not an integral part of the tunnel project.

Some Modern Substitutes for the Swing Bridge*

By HARDY CROSS

As essential requirements for an efficient movable bridge, C. C. Schneider has laid down the following: The bridge, when closed, should comply as nearly as possible with the requirements for a well designed fixed span; the machinery should be so designed that the span can be easily operated and controlled while moving; the first cost and subsequent expense of operation and of maintenance should be as low as is consistent with the other requirements; the machinery and the structural parts resisting static stress should be entirely separate and distinct, so that when the bridge is closed any break-down in its machinery will not affect its usefulness as a bridge.

We may, however, add to the above requirements certain others: the flow of the stream shall be obstructed as little as possible; no adjoining dock space shall be damaged; the bridge shall allow of the construction of additional tracks without heavy expense for new right-of-way; property adjoining the right-of-way shall not be damaged; the bridge shall move quickly where there is much navigation, and the bridge must be frequently opened—say more than twenty-five times per day. Any or all of

*Abstract from *Harvard Engineering Journal*, April 1912.

Generated on 2024-09-29 23:41 GMT / https://hdl.handle.net/2027/uiug.30112007837674
Public Domain, Google-digitized / http://www.hathitrust.org/access_use#pd-google
Digitized by Google
Original from UNIVERSITY OF ILLINOIS AT URBANA-CHAMPAIGN

these requirements may properly apply in special cases, and any one of them makes the swing bridge either objectionable or impossible. Where there is a probability of additional tracks the swing bridge may be constructed as a two or three-track bridge awaiting further construction, but this is certainly not to be recommended, as the interest on the additional investment may become a serious matter if the new construction is postponed. When a swing bridge becomes objectionable or impossible for any of the above reasons, some other arrangement is needed, and this need—a very pressing one in large cities where internal harbors are being developed, where dock property and right-of-way are valuable, and where traffic is increasing rapidly—has led to the development of the following types:

a. Bridges translated in a horizontal plane, or retractile bridges;

b. Bridges which rotate about a horizontal axis, or trunnion bascule bridges;

c. Bridges in which the motion is a combination of translation in a horizontal plane and rotation in a vertical plane, or rolling lift bridges;

d. Bridges that lift vertically.

The first class given above, those which are translated in a horizontal plane, includes the so-called retractile bridges. These were at one time largely used in Great Britain and on the continent, and have been used to some extent in this country. The motion may take place in various ways: the movable span may be raised above the adjacent fixed span or roadway and then roll back over it; it may be lowered and roll back under the adjacent fixed span; it may roll back diagonally until it clears the channel; or the movable span may roll to one side of the fixed span and then roll back parallel to it. In any case the movable span is carried on two or more pairs of rollers when moving, there being a sufficient counterweight to make it stable over these points of support. When closed it may either rest on supports at its two ends or there may be another support at the river edge of the wide abutment and the span may be continuous for live load over these three supports. In this latter case, however, there would be a tendency for one or the other end to rise and hammer on its bearing, as there is usually no latching or raising device at the ends of this type. Thus this type requires a long span and a wide substructure. While simple in construction, it is difficult to operate, the resistance to motion of car wheels on rails—for such is the usual type—being much greater than that to be found in other types. Arrangements to raise or lower the span further complicate the mechanism, whereas if the span moves obliquely or at right angles to its centre line before rolling back, valuable dock property may be rendered useless.

A type of bridge which meets the above requirements much more satisfactorily than the retractile bridge is the second type—bridges which rotate about a horizontal axis—trunnion bascule bridges. This type, though rather old, has been largely developed in the past two decades, chiefly in competition with the Scherzer rolling lift bridge to be described later. The river arm of these bridges is usually counterweighted so that the centre of gravity lies at or near the trunnion. As the bridge rotates about the trunnion, therefore, friction and inertia are the only resistances to motion.

There are, in general, two classes of this type, those in which the counterbalance is attached to the trusses directly and those in which the dead load is balanced by the pull of cables or chains running back to a tower on the abutment and carrying a counterweight at their ends. In either case the force causing rotation is applied through some rack and pinion arrangement on the abutment. To the first class belong the Strauss bascule bridge, the Page type, the Borg bascule bridge, and the ordinary trunnion bridge built by the city of Chicago or as illustrated by the Tower bridge in London. In the second class belong those bridges in which the counterweight in descending follows a curved track, Shoemaker's patented bridge, the Brown type of bridge, together with most of the trunnion bascule bridges which are not patented.

In the bridges in which the counterweight is attached to the heel of the trusses, heavy bending stresses are brought upon the steelwork if the counterweight is rigidly attached to it. Hence the counterweight is hinged so that it may always swing freely. If the counterweight is attached directly to the tail end of the trusses, this swinging cuts out some of the sway bracing and this too at a point where this is much needed. Moreover, a large counterweight pit is required. In the latest type of Strauss bridge, therefore, the counterweight is placed above the

Generated on 2024-09-29 23:41 GMT / https://hdl.handle.net/2027/uiug.30112007837674
Public Domain, Google-digitized / http://www.hathitrust.org/access_use#pd-google
Digitized by Google
Original from UNIVERSITY OF ILLINOIS AT URBANA-CHAMPAIGN

trusses, its motion being guided by a tower while it bears upon the heel of the trusses, through a column. This means three points at which motion occurs, at the main trunnion, at the trunnion attaching the counterweight to the column or to the tower, and at the trunnion attaching the column to the truss, as against two trunnions in the former case. Thus the gain is made at the expense of simplicity. No doubt all these points of movement may be designed with sufficient strength, but nevertheless journal bearings for heavy loads are expensive to construct and are liable to rapid depreciation.

Wherever the tail end of the truss bears the load of the counterweight, the trunnion is placed vertically near the centre of gravity of the bridge in order to insure approximate counterbalancing in all positions. This makes it necessary to set the main trunnion at some distance back from the face of the abutment in order that the bridge, when open, may not foul the waterway. This means a longer span for the required opening. Of course, the span for live load may be decreased by having the trusses, when the bridge is closed, bear upon a shoe near the end of the abutment. In the tail-end type there may be, in this case, a tendency for the end to rise. The Strauss Bridge Co., however, has brought out another design in which the main trunnion is the end bearing pin of the truss. The counterweight acts upon the truss through a lever attached to the top of a tower, to one end of which lever the counterweight is attached and to the other end a tension member attached somewhere along the top chord. This arrangement is somewhat similar to that in use in the trunnion bridges in which the counterweight is carried by a cable. In these bridges, however, there are five or six movable bearings per truss and hence in avoiding one objectionable feature, another is introduced.

The heavy counterweight is an additional source of expense in nearly all bascule bridges. The Page bridge, when deck, uses the reaction of the approach span as a counterweight. While this means one more cut in the floor and adds to the number of movable parts, it presents some distinct advantages. This arrangement is not possible with through trusses, and the through trusses of the Page type differ from the ordinary trunnion type only in the fact that the weight of the counterweight is brought to bear on tail end of the movable span through a roller running on a track curved to such shape that the overturning moment is varied during the travel of the span. The arrangement is, however, rather complicated.

In the Borg type the trunnion shaft goes through and hence serves to fix unalterably the spacing of the bearings. Otherwise there is little difference from other trunnion bridges.

There is in many offices a strong prejudice against trunnion bridges counterbalanced by means of cables or chains. In these bridges the ratio of the lever arms (about the trunnion), of the weight of the span, and of the cable pull, will vary as the span rises, unless some arrangement is made to prevent it. Various arrangements have resulted. In the simplest type the counterweight is sectionalized and the parts are successively dropped on shelves in the tower as the weight descends, being picked up again as the weight rises. The weights and the points at which they are detached are so arranged that the overturning and counterbalancing moments are approximately equal throughout the travel of the bridge. This scheme seems to have given satisfaction where it has been used, but it appears to be rather crude and likely to give trouble. The unbalanced moment of the bridge is not constant, nor does it vary gradually, but it is subject to sudden changes which, though they may be small, tend to rack the operating machinery.

The better plan for varying the pull on the cable is to compel the counterweight, while descending, to follow a curved path. Thus the counterweight is supported partly by the reaction of the track and partly by the pull of the cable, the latter varies gradually, and the unbalanced overturning moment may be made absolutely constant. This plan is, of course, applicable only to small spans, as the construction of a track of such unusual curvature would with difficulty be practicable where the counterweight was very heavy.

The other method of keeping the unbalanced overturning moment of the bridge constant consists in keeping the cable tension constant while varying the lever arm of this tension. In the Shoemaker type of bridge this arm is varied by making the cable run on a sheave which is attached to the foot of the tower by another cable of given length. In the Brown type the cable winds itself around a fixed curve as the bridge swings,

Generated on 2024-09-29 23:45 GMT / https://hdl.handle.net/2027/uiug.30112007837674
Public Domain, Google-digitized / http://www.hathitrust.org/access_use#pd-google
Digitized by Google
Original from
UNIVERSITY OF ILLINOIS AT
URBANA-CHAMPAIGN

and after the bridge makes an angle of more than 81° with the vertical, this winding causes the counterweight to rise, thus giving an automatic brake action. This latter type is rather complicated in its arrangement. It is scarcely worth while to give a detailed description, except to say that its novelty and ingenuity seem its chief asset, and its complexity and large number of movable parts appear to be a great disadvantage.

The next type of bridge, in which there is a combined rolling and rotating motion, includes the Scherzer, Rall, Cowing, and Schinke types—all patented. The principal of these bridges today is the Scherzer, a bridge which has enjoyed great popularity and in which many excellent ideas are combined with several objectionable features. The type is too well known to necessitate a very detailed description. It consists simply of a river arm, to the near end of which a counterweight is attached. To the rear end of the bridge is attached a heavy circular girder, the centre of which is the centre of gravity of the truss and counterweight. By power applied to a rack and pinion this girder is made to roll on a heavy casting attached to the top of a fixed plate girder. Thus the bridge rolls up and away from the waterway.

This type appears to meet admirably all the requirements which we have given. Since, when opening, it rolls away from the waterway, the bearing when closed may be put on the edge of the abutment, and thus the smallest possible span may be used. Since the end of the circular girder may end in a tangent to the circle of any desired length, this end of the bridge has, when closed, an excellent bearing, while the free end may have the usual bearing of a fixed span; the counterweight may be so designed as to act as bracing; therefore the bridge, when closed, meets all the requirements of a fixed span. It moves quickly and with little resistance, and it does not foul adjoining property.

There are two very important objections to this type, both of which need to be strongly emphasized. They were first brought out in the Twenty-Fifth Annual Report of the Board of Public Works of Chicago, and further illustrations are given in their Thirty-First Annual Report. When these bridges roll, the contact between the circular girder and the top casting of the fixed girder is, of course, if neither of them deflects, merely a line. Deflection makes this an appreciable area, but, to quote from the Chicago report, "calculation, as well as actual observation on Chicago bridges, show that this breadth of contact surface can scarcely be more than six inches," and on this small area all the dead load must be carried. Photographs are reproduced in the report, showing flange angles cracked and flange rivets failing, as results of this enormous concentration of load. In one case the flange angles have entirely broken away from the web of the circular girder. Still another view shows that, in one case, the flanges have crept very perceptibly on the web, thus illustrating the second objection to this type, the horizontal thrust of the horizontal girder against the circular girder.

This latter objection is so important as to need further attention. Evidently, since both rotation and translation take place, there must exist a couple combined with a single force. One of the forces of this couple is supplied by the thrust of the pinion, while the other acts at the point of contact of the horizontal and circular girders. That this force may be considerable is shown by the 'creeping' of the girder flanges in Chicago, and approximate computations of its value show that it may amount to nearly three times the resistance of a braked train, assuming this latter as *O*, 6 tons per linear foot of track, or 20% for Cooper's E-60, loading.

Variations of the Scherzer type in which an effort is made to do away with these two objections are the Rall, the Cowing, and the Schinke types. In the Rall type the bridge bears, when open, upon an axle which carries a roller running on a longitudinal girder. The axle is on the centre of gravity of the structure. Above this a strut is attached to the span, and this strut is drawn back by a rack and pinion on the shore pier. As this strut is drawn back, the tail end of the bridge thrusts against a strut attached to itself and to the forward pier. Thus the bridge is made to revolve and roll backward on the girder at the same time, the weight being taken entirely by the girder. There is no horizontal thrust on the girder and the weight, being carried in frictionless journal bearings, is taken care of as satisfactorily as in the simple trunnion type. The thrust and pull on the piers is, however, still present, and the number of movable parts has increased. One advantage given by this ar-

Generated on 2024-09-29 23:50 GMT / https://hdl.handle.net/2027/uiug.30112007837674
Public Domain, Google-digitized / http://www.hathitrust.org/access_use#pd-google
Digitized by Google
Original from UNIVERSITY OF ILLINOIS AT URBANA-CHAMPAIGN

rangement, however, is that when closed the bridge bears on an end pin and acts as a simple span, and the rollers with their bearings or the track girder are easily removed or repaired.

In the Cowing bridge, the bearing is through a circular girder similar to that of the Scherzer bridge, but this girder bears upon a nest of rollers and upon this circular nest of rollers the bridge revolves. The centre of rotation and of gravity remains fixed, and thus this bridge is really similar to the trunnion bridges. A counterweight is, of course, necessary to bring the centre of gravity into coincidence with that of rotation. When closed the bridge has a special end bearing, so that the rollers carry none of the live load. The power is applied at the lower flange of the circular girder. This type presents several advantages. The racking effect on the foundation is gotten rid of; ample bearing is provided, whatever the position of the bridge; except in the number of rollers in the bearing cradle, the simplicity of the Scherzer is secured. There appear to be only two objections to this type —the large number of rollers and the difficulty of securing equal bearing on these rollers. Since, however, the rollers are easily removed for cleaning or replacement, this objection is not serious.

In the Schinke bridge, an operating strut, to which the power is applied, is attached to the upper chord of the bridge. The tail end of the bridge carries a roller which runs on a curved and nearly vertical track. Below this roller is attached a strut, which in turn is attached to the pier. When power is applied tending to draw back the operating strut, the tail end of the bridge thrusts against the second strut, which rotates around its pinion connection to the pier, while the roller follows its curved track. The curvature of this track is such that the centre of gravity of the movable parts is constrained to move in a horizontal straight line. Thus, by this peculiar arrangement, the same object is attained as in the Scherzer bridge, the bridge rotating about its centre of gravity, which, in turn, moves horizontally back from the waterway. Like the Cowing and Scherzer bridges, this type avoids the use of a tail pit. The same criticism, however, that has been so often made above applies here; there are many moving parts. There is, however, no racking on the pier, as the force from the operating strut and from the reacting strut attached to the bottom chord both act on the same pier, and hence a bending moment on the pier results only between their points of application. The dead load, moreover, is carried in journal bearings and not in a single line, and these bearings may be made as wide as is desirable. There are, however, four bearings for each truss. Another objection lies in the position of the reacting strut, which reaches up from the pier diagonally to the lower chord, and thus presents a somewhat graceless appearance from the river.

Another type of movable bridge of some importance is the straight lift bridge, introduced into this country by Dr. Waddell. The idea, however, is rather old, a bridge of practically the same design having been built over the Grand Surrey canal on a branch of the London, Brighton & South Coast railway early in the past century. Several others were also built at various points in Great Britain and Ireland. Several of these bridges have been constructed in America, and the recent construction of a 245-ft. direct lift span in the new Hawthorne avenue bridge over the Willamette river at Portland, Oregon, where a lift of 110 ft. is made in from 45 to 60 seconds, seems to indicate that the bridge is still popular in some quarters. The type is very simple, consisting of a fixed span to the ends of which cables are attached, these cables passing over sheaves at the top of towers on the end piers or abutments, and carrying counterweights at their free ends. The tops of the towers are usually braced by a girder reaching across the opening.

This type has the great advantage that the span is constructed in every way like a fixed span, and when closed, acts and bears as does a fixed span. Compared with a swing bridge, this type offers the additional expense of added weight in the end piers of the steel towers, and of the cables and counterweights, to be partly offset by the cost of the centre pier and turntable of the swing bridge. Of course, it may be said that where only one arm of the swing bridge is required, the other arm is needless expense.

An interesting variation of this type of bridge is that used in the new bridge over the Missouri river at Kansas City. The bridge is double deck, the upper deck being for highway and above the required clearance. The lower, or railway deck fouls the clearance, however, and in one of the spans

Generated on 2024-09-29 23:43 GMT / https://hdl.handle.net/2027/uiug.30112007837674
Public Domain, Google-digitized / http://www.hathitrust.org/access_use#pd-google
Digitized by Google
Original from UNIVERSITY OF ILLINOIS AT URBANA-CHAMPAIGN

this deck is suspended by hangers running up into the verticals, so that the lower deck in this span is simply a suspended platform which can be raised to provide the required clearance. It will be interesting to know how this scheme works under traffic. It is probable that the lower deck will need to be raised but seldom, and the great saving thus obtained in the substructure of a long high level bridge will certainly justify high maintenance charges.

A proposed type of bridge which combines in some ways the features of the vertical lift and trunnion bascule types is the gyratory lift bridge, patented by Eric Swenson. In this type the bridge has, attached to its ends, towers on the tops of which are counterweights. These towers are capable of rotation about horizontal trunnions. When the bridge is open, the plane passing through the centre line of span, centre line of counterweight, and line of trunnions, is horizontal; when the bridge is closed, this plane is vertical. The centre of gravity of the structure lies, of course, on or near the line of the trunnions. The many objections to this type are obvious, and it appears to offer few, if any, advantages.

At least one bridge has been built in which there is a combination of the bascule and horizontal swing types. This is a bridge at Marseilles, having 70 ft. clear waterway. The bridge tilts to a slope of 1 to 14 for small and low boats, giving a headroom of 10 ft. 3 in. For larger boats it swings about a vertical axis after tilting, thus giving an entirely clear passageway. It is stated that, most of the traffic being for low boats, this scheme "saves 4 hours out of 10 in every day." While this might be worthy of consideration where the traffic for low boats is very heavy, the complicated machinery would in general be a sufficient argument against its use.

In regard to bridges with two leaves, it would seem that they should be avoided wherever possible. For highway bridges, these two-leaf bridges offer many æsthetic advantages. They may, of course, be built to act as cantilevers, in which case a shear lock at the centre becomes necessary in order to equalize the deflection of the spans, or they may be built as two or three hinged arches. The two-leaf Strauss bridge at Copenhagen, for example, acts, when closed, as a three-hinged arch. The design of shearlocks is at present more or less in an experimental stage. The Scherzer company uses a lock consisting of two castings which form a dovetail joint when the bridge is closed. The Strauss company, however, uses power-driven shearlocks. Both appear very likely to give trouble due to temperature changes, and the Scherzer design, as it can be built with some clearance, will probably be more satisfactory. The Scherzer company also controls a practical patent for securing continuity of the chords when closed, thus making a two-hinged arch as a single span. No such bridges, however, have as yet been built.

Pumping by Compressed Air*

By HERBERT T. ABRAMS†

NOTWITHSTANDING the fact that the air-lift system has been in commercial use for nearly twenty years and thousands of plants are in daily operation all over the world, no mathematically correct formulas have been published covering the design of these pumps, nor is there exact information at hand for calculating the volume of air and pressure required to operate them under all conditions. This is due to a number of variable factors which enter into each proposition, and if we are to undertake to derive a practical working formula, we must assume certain efficiencies for the system and assume also that the wells will be properly piped to meet the true relation of submergence to lift.

Although it is impossible to construct a formula which can be applied uniformly to all conditions met in this class of work, yet we can define the trend and introduce certain rules which will permit any engineer to calculate the requirements for any given proposition when the exact data covering

*Abstract from *School of Mines Quarterly*, April, Columbia University.
†Engineer Ingersoll-Rand Co., New York.

Generated on 2024-09-29 23:42 GMT / https://hdl.handle.net/2027/uiug.30112007837674
Public Domain, Google-digitized / http://www.hathitrust.org/access_use#pd-google
Digitized by Google
Original from UNIVERSITY OF ILLINOIS AT URBANA-CHAMPAIGN

the case are known. The data required, and the factors entering into these calculations may be reduced to the following:

V_a = free air piston displacement required to raise 1 gal. water.
h = total vertical lift in feet.
H = submergence in feet.
C = constant (efficiency of the system).

In this, V_a is the free air (piston displacement of the compressor) required to raise 1 gal. of water, due allowance having been made for the ordinary volumetric efficiency of the air-compressor. If the compressors are in bad shape or poorly designed, of course more displacement will be required from such a machine than from a well designed compressor in good working order. By 'lift' is meant the total vertical lift from the pumping level of the water in the well to point of discharge. 'Submergence' is the depth the air-pipe is submerged below the pumping level of the water in the well, and is an important factor in any installation; the percentage of submergence, so often heard of, is the percentage of the total length of pipe which is submerged in the solid water when pumping. The necessary percentage of submergence varies in accordance with the lift; low lifts require proportionately more submergence than high lifts, or in other words, the necessary submergence decreases as the lift increases. The range of these percentages lies within the following limits: For a lift of 20 ft., 66%; for a lift of 500 ft., 41%. The average best percentage in the class of work usually encountered will lie between 50 and 65%. Submergence also governs the pressure required, both the starting pressure and the working pressure. The air-lift differs from other pumps in that the pressure necessary to raise the column of water does not depend upon the head, h, but upon the submergence, H, or in other words, H is the actual head against which the air pressure acts.

The first step in a calculation of this kind is to determine from the lift what the proper submergence should be, and knowing this submergence, the work can be easily calculated on the basis, P = 0.44 H. The following formula may be used to calculate the air volume required (free-air piston displacement) to raise one gallon of water. It closely approximates average practice:[1]

$$V_a = \frac{h}{C \log \frac{H + 34}{34}}$$

The annexed table also shows the value of C calculated from the efficiency of the system under various heads, with proper submergence.

TABLE FOR VALUE OF C

h = Lift (Feet.)	C = Constant
10 to 60	245
61 to 200	233
201 to 500	216
501 to 650	185
651 to 750	156

Problem.—Given a bore-hole, well, or shaft 250 ft. deep, the water in which stands 50 ft. below the ground surface, but which falls 25 ft. when being pumped at the rate of 200 gal. per min., and it is required to raise the water 25 ft. above the ground:

	Feet.
Standing water-level in well, measured from surface	50
Drop when pumped	25
Elevation above surface to raise water	25
Total lift	100

If the best ratio of submergence for a lift of 100 ft. is 58%, then

$$H = \frac{h \times 0.58}{100 - 58} \text{ or } \frac{100 \times 0.58}{100 - 58} = 138 \text{ ft.},$$

and applying our formula,

$$V_a = \frac{100}{C \log \frac{138 + 34}{34}},$$

and further introducing the value of C from the table, we have

$$V_a = \frac{100}{233 \times 0.704151} = 0.60.$$

V_a = 0.60 cu. ft. (piston displacement) per gallon of water; hence for 200 gal., 200 × 0.60 = 120 cu. ft. will be required.

The next calculation is to find the starting and the working pressure. Observe that the normal standing water-level is 25 ft. higher than the working, which indicates a

[1] In part suggested by Edward A. Rix.

Generated on 2024-09-29 23:45 GMT / https://hdl.handle.net/2027/uiug.30112007837674
Public Domain, Google-digitized / http://www.hathitrust.org/access_use#pd-google
Digitized by Google
Original from UNIVERSITY OF ILLINOIS AT URBANA-CHAMPAIGN

submergence at the beginning of operations equivalent to $138 + 25 = 163$ ft. The starting pressure must be just sufficient to overcome that due to the height of the water column above the foot-piece.

$163 \times 0.44 = 72$ lb. gauge, the starting pressure.

$0.44\ H = 138 \times 0.44 = 61$ lb., the working pressure.

The actual pumping level in a well or group of wells can seldom be known in advance of a test. It is customary to assume certain conditions of lift and submergence, basing such conclusions on experience, and proceed to pipe the wells accordingly. After the piping is installed and the working conditions learned, the submergence is altered to suit by raising or lowering the pipe in the well until the best ratio is established.

The quantity of water a well will yield depends upon its diameter and the natural flow. It is also essential that the pipes both for air and water be properly proportioned, for the reason that velocity of flow is an important factor; if too large a pipe is used the air gets through without doing all the work it should, and on the other hand, if the velocity is too high, there is undue friction loss, and also inefficient expansion of the air bubbles. The best results are ordinarily obtained by providing for a discharge of 12 to 15 gal. per square inch area of discharge pipe. Tables are available for determining the friction loss of air pipes. It is, of course, essential to keep this loss within reasonable limits. The flow should not exceed 1500 ft. per minute.

One reason why the air-lift has been so popular, aside from its flexibility and simplicity, is the fact that the yield of a well is frequently increased by its use. Wells can be cleaned of sand, keeping open the water-bearing seams. As there is little apparatus in the well, an unobstructed flow is assured. The air-lift will handle all the water a well yields, but if a given well is equal, at its maximum, to a flow of 50 gal. per minute, the air-lift has no miraculous power whereby the yield can be increased. Water is also purified and improved by the intimate commingling with air on its passage through the discharge pipe. There is a complete aeration as the water flows upward, putting it in condition to throw off sulphur gas, precipitate iron, and in a measure prevent vegetable growth.

The pumping of oil wells offers a superior opportunity for the air-lift, and in this line of work compressed air has been pre-eminently satisfactory. One of the advantages possesed by the air-lift, whether it be in pumping water or oil, is the ability of the system to handle sand and gritty matter.

On account of the facility with which the air-lift, owing to the fact that no working parts come in contact with material being pumped, can handle sand, mud, and other substances destructive to ordinary mechanical pumps, it is an ideal method for pumping in the following cases:

1. Slime, a mixture of water and the very fine portions of crushed ore coming from a reduction plant.

2. Sand and water for stone saws. All preparation necessary for work of this kind is a 'master' well or pit, sunk to a proper depth to provide the necessary submergence.

3. The air-lift has done excellent work as a dredge pump, and if its usefulness along these lines were better appreciated, we should see a great many more installations. The arrangement of air-lift units on a scow, with proper facilities for raising and lowering the pipes, presents unexcelled features of simplicity and capacity.

4. The agitation of slime in the cyanide process also offers an opportunity for the air-lift, as complete and satisfactory aeration can be brought about by placing an air-lift in a cyanide tank specially designed for the purpose.

The air-lift is past the experimental stage and is taking its place with other applications of compressed air where steady reliable results are appreciated.

Generated on 2024-09-29 23:43 GMT / https://hdl.handle.net/2027/uiug.30112007837674
Public Domain, Google-digitized / http://www.hathitrust.org/access_use#pd-google
Digitized by Google
Original from
UNIVERSITY OF ILLINOIS AT
URBANA-CHAMPAIGN

Book Reviews

POWER HOUSE DESIGN. By John F. C. Snell. Longmans, Green & Co., London. Pp. 448, index. For sale by the *Mining and Scientific Press,* San Francisco, California. Price $6.

The title to this book is somewhat misleading, from an American standpoint, as the proper assembly of apparatus, and the factors governing its selection, installation, and use form the dominating feature of the subject matter rather than the buildings in which they are enclosed. A wide range of application, and practice in many localities is covered thoroughly and comprehensively. Systems, preliminary notes on the choice of site, and type of plant, buildings, steam-raising plant, steam and feed-pipe systems, steam generators, various types of condensers, cooling towers, and auxiliaries, internal combustion engines, gas and oil engines, producers, waste-heat stations, hydro-electric power-houses, power-house switchgear, practical notes on electrical plants, small power-houses and substations, are the titles of the chapters into which the book is subdivided, together with appendices covering water-tube boilers, velocities in circulating water-pipes, British electricity regulations for factories, chimney cooling towers, and tests of feed pumps, show the comprehensiveness of the text and the variety of types of power plant installations covered. Seventeen plates illustrating typical power plants in various parts of the world afford an excellent opportunity for the engineer to study the characteristics in practice both at home and abroad.

Many formulas and much statistical data on performance and operation are presented, in fact the book is practically an encyclopedia on power-plant design and construction, and the absence of superfluous padding greatly enhances its value as a book of reference and facilities ready reference to the subject upon which information is desired.

SEWAGE SLUDGE, including the TREATMENT AND UTILIZATION OF SLUDGE, by Alexander Elsner, and THE DRYING OF SLUDGE, by Fr. Spillner, OPERATION OF MECHANICAL SEWAGE PLANTS, by Fr. Spillner and Mr. Blunk, and SLUDGE TREATMENT IN THE UNITED STATES, by Kenneth Allen. McGraw-Hill Book Co., New York. Pp. 272, index. For sale by the *Mining and Scientific Press,* San Francisco, California. Price $2.50.

This is an exceptionally able treatise on a branch of sanitary engineering that has recently come into prominence in connection with the problems of large municipal districts. Four different phases of the subject are covered, and each has been prepared by recognized authority. The sections prepared by Messrs. Spillner and Blunk will be especially interesting to American readers on account of the characteristic thoroughness and attention to detail with which the data have been presented, and also for the insight that it gives into European practice. The authors are fortunate in their selection of translators, as the text has lost nothing in clarity by the process. The fourth section prepared by Mr. Allen makes the book complete, and affords an opportunity for comparison between European and American methods as exemplified in the city of New York and other large Eastern cities.

THE ELEMENTS OF STRUCTURES. By George A. Hool. Pp. 182, index. McGraw-Hill Book Co., New York, 1912. For sale by the *Mining and Scientific Press,* San Francisco, California. Price $1.75.

This is the first of a series of books on engineering subjects prepared for students in the University Extension correspondence courses conducted by the University of Wisconsin, in which the author is assistant professor of structural engineering, and deals with the fundamentals of structural engineering in the clear and lucid manner that bespeaks a comprehensive grasp of the subject as well as the ability to impart knowledge to others. The book is prepared for those men who, having an ordinary knowledge of arithmetic, algebra, plane and solid geometry, logarithms, trigonometry, mechanical drawing, and strength of materials, are desirous of continuing their studies on engineering construction. Until the advent of the various excellent correspondence schools the young man who was ambitious to obtain an education along engineering lines, and was unable to avail himself of a regular university training, had no means of study available other than such books as were prepared for engineers and advanced students. These were so technical in their character as to do little more than confuse

Generated on 2024-09-29 23:42 GMT / https://hdl.handle.net/2027/uiug.30112007837674
Public Domain, Google-digitized / http://www.hathitrust.org/access_use#pd-google
Digitized by Google
Original from UNIVERSITY OF ILLINOIS AT URBANA-CHAMPAIGN

and discourage the seeker after knowledge and make his ambition to better his condition seem impossible of accomplishment. As a stepping-stone between an academic education and the more advanced engineering technology, such books as Mr. Hool has given us afford an opportunity for any man possessing a rudimentary education, plus a goodly amount of application and ambition, to overcome the lack of a university training and qualify himself to enter the engineering profession.

TREATISE ON HYDRAULICS. By Mansfield Merriman. Pp. 565. John Wiley & Sons, New York, 1912. For sale by the *Mining and Scientific Press*, San Francisco, California. Price $4.

This is the ninth edition of a standard work, revised and reset with the assistance of Thaddeus Merriman. The eighth edition was published in May 1903. Much new matter will be found on hydraulic instruments, methods of measuring water, oblique weirs, submerged tubes, regulating devices for pipes, conduits, dams, backwater, rainfall, evaporation, and run-off, bringing the subject matter up to present-day practice in hydraulics. The tables of coefficients for orifices, weirs, pipes, conduits, and channels have been revised and extended to embody the results of recent experiments. A new and simplified method of designating numerals has been employed, facilitating ready reference to formulæ discussed in the subject matter. A thorough subject index has been included, and the book is in every way up to the standard that has made nine editions and many reprints necessary since its first appearance in February 1889.

LABORATORY MANUAL FOR TESTING MATERIALS OF CONSTRUCTION. By L. A. Waterbury, C.E. John Wiley & Sons. Pp. 270, index. For sale by the *Mining and Scientific Press*, San Francisco, California. Price $1.50.

As the title implies, this book is written for the use of students as a text-book in laboratory testing practice. The subject matter covers testing of all known building materials, and is treated under the heading of general instructions, laboratory work, preparation of reports, description of apparatus, tests of cement, tests of concrete, concrete, iron, steel, wood, brick, sand, gravel, stone, and asphalt. Appendices supplement the matter in the body of the text and give the reports of the sub-committees of the various engineering societies bearing upon the subject, and include progress report on uniform tests of cement, standard specifications for cement, method suggested for the analysis of limestones, raw mixtures, and portland cements, progress report of special committee on concrete and reinforced concrete, standard specifications for structural steel for bridges and buildings, standard specifications for open-hearth boiler plate and rivet steel, and requirements for paving brick. The entire book is comprehensive in its treatment of the various subjects and replete with information.

CENTRIFUGAL PUMPING MACHINERY. By Carl George de Laval. Pp. 180, index. McGraw-Hill Book Co., New York, 1912. For sale by the *Mining and Scientific Press*, San Francisco, California. Price $3.

The author's preface remarks that "A writer upon centrifugal pumps has said that they defy the mathematician and possess more tricks than a circus mule." The reference to the mule is a particularly apt simile as applied to a centrifugal pump, as, with all its idiosyncrasies and occasional defiance of all known rules, it fills a function in the world's work for which there is no adequate substitute. Mr. de Laval is general manager for the Henry R. Worthington Co., and as such has had an exceptional opportunity for the compilation of a vast amount of data taken from the actual performance of centrifugal pumps under all sorts of conditions, and, aided by a trained mind and a thorough grasp of the subject, has brought together the result of many years' experience for the benefit of investigators in the same field. Design, operation, and the factors bearing upon them, as well as the limitation of the adaptability of this style of pump, have been treated exhaustively. In fact, the thoroughness and practicability of this book make it infinitely more valuable than any mere discussion of abstract theory, however learned. In addition, Mr. de Laval has exhaustively discussed, analyzed, and correlated the theory and practice in such a way as to clear away much of the fog that hangs over this subject, and proves that, after all, it is indeed an obstinate pump that can long continue to "defy the mathematician."

Generated on 2024-09-29 23:46 GMT / https://hdl.handle.net/2027/uiug.30112007837674
Public Domain, Google-digitized / http://www.hathitrust.org/access_use#pd-google
Digitized by Google
Original from UNIVERSITY OF ILLINOIS AT URBANA-CHAMPAIGN

Engineering Bonds

*Tax exempt in California.
†Legal investment for savings banks in California.
‡Available as security for deposit of state, county, and municipal funds and postal savings deposits.

*THE PACIFIC LIGHT & POWER CORPORATION has issued collateral, trustee 6% 5-year gold bonds, dated July 1, 1910, due July 1, 1915, in denominations of $1000. This company was organized February 10, 1910, and acquired the entire properties of the Pacific Light & Power Co., which is engaged in supplying electricity for light, power, and street railway operation in Los Angeles, California, and vicinity. This corporation also owns the Southern California Gas Co., operating in the same locality. The total population served is approximately 400,000.

CAPITALIZATION

Stock.	Authorized.	Issued.
First pfd. 6% cumulative	$ 5,000,000	$ 2,042,500
Second pfd.	10,000,000	10,000,000
Common	25,000,000	12,042,500
Total stock	$40,000,000	$24,085,000

BONDED DEBT

Prior liens (closed mortgage)	$ 9,318,000	$ 9,318,000
Pacific Light & Power Corp. collat. trust 6% (this issue)	3,000,000	2,000,000
Total bonds	$12,318,000	$11,318,000

OFFICIAL STATEMENT OF EARNINGS, YEAR ENDED DECEMBER 31.

	1908.	1909.
Gross income	$1,796,899.02	$1,923,509.97
Operating exp. and taxes	957,591.60	1,074,572.90
Net income	$ 839,307.42	$ 848,937.07
Interest on funded debt		462,661.86
Balance		$ 386,275.21
Interest on $2,000,000 6% bonds, 1915 (this issue)		120,000.00
Surplus available for sinking funds, dividends, etc		$ 266,275.21

These bonds are secured by a first lien on the entire property of the Southern California Gas Co., through deposit with trustee of $4,000,000 first mortgage bonds of the Southern California Gas Co., and are a direct obligation of the Pacific Light & Power Corporation. The present generating capacity of the company is 43,000 hp.; of this amount about 19,000 hp. is generated by water, the principal hydraulic plant being at Borel on the Kern river. The principal steam plant, 20,000 horse-power, is at Redondo. The company has erected a new steam plant at Redondo which, when completed, will increase the present generating capacity of the company to about 35,000 hp. Four hundred and twenty-three miles of high-tension transmission line are in operation and 22 miles are in course of construction. The plant of the Southern California Gas Co. has a capacity of 4,000,000 cu. ft. per day and has 195 miles of mains, 9650 services, and 10,000 meters in use in the city of Los Angeles.

The SAN JOAQUIN LIGHT & POWER CORPORATION has issued first and refunding mortgage 5% bonds, due August 1, 1950, in denominations of $1000. The net income of this company for 1911 was $622,537.58; interest charges $290,596.79; leaving a balance of $331,940.79. The territory served includes the seven principal counties of the San Joaquin valley covering an area approximately 195 miles in length by 78 miles in width; the population, according to the 1910 census, being 192,514. The corporation owns and operates three hydro-electric plants; a steam electric reserve plant in Fresno and a steam turbine plant in Bakersfield; the total installed capacity at present amounting to 37,000 hp. Gas is distributed at Bakersfield, Merced, and Selma, and a street railway system is operated in Bakersfield and Kern. The bonds are secured by a direct lien on the entire property acquired from the San Joaquin Light & Power Co. and the Power Transit & Light Co., subject to old bonds outstanding, which are to be retired by this issue. The first and refunding bonds are also a first mortgage on all of the property formelry constituting the Merced Falls Gas & Electric Co., the steam turbine plant recently erected at Bakersfield and such other new property acquired and constructed since the organization of the present corporation.

Generated on 2024-09-29 23:50 GMT / https://hdl.handle.net/2027/uiug.30112007837674
Public Domain, Google-digitized / http://www.hathitrust.org/access_use#pd-google
Digitized by Google
Original from UNIVERSITY OF ILLINOIS AT URBANA-CHAMPAIGN

Company Reports

The annual report of the Associated Oil Co., proprietary and affiliated companies for the year 1911 has been issued by W. S. Porter, vice-president. This company is proprietor of the Associated Transportation Co., Associated Supply Co., the Bakersfield Iron Works, and also operates and owns the Pioneer Midway Oil Co., Sterling Oil & Development Co., West Coast Oil Co., Amalgamated Oil Co., Salt Lake Oil Co., and the Arcturus Oil Co. Eleven wells were completed, including two in the McKittrick field, five in the Coalinga field, three in the Midway field, and one in the Lost Hills field. The report states that development work in the Lost Hills district has not proved entirely satisfactory, but the work done in the Buena Vista has demonstrated that these lands are of great value. The high-duty compressors placed in the Kern River field are highly commended, their operation having not only checked the encroachment of water but reduced the general water-level as well. The average cost of oil produced was 4.6% lower than for the preceding year as a result of the operations of this plant. The construction of a complete and modern refinery at Avon, near Port Costa, at an expenditure of $1,250,000, is under consideration. In spite of the reduced selling price of oil, the net earnings of the company were approximately the same as during the preceding year. The income and profit and loss account follows:

Disbursements

Purchase of merchandise, labor, and material used in production and operation, general and administration expense	$15,910,910.68
Interest on notes and deferred payments	140,933.26
Interest on bonds	687,754.25
Taxes	113,624.64
Depreciation reserve	1,718,215.07
Balance to profit and loss	1,766,246.00
Total	$20,337,683.90

Receipts

Sales and other revenue	$20,192,994.90
Dividends from other than proprietary companies	144,689.00
Total	$20,337,683.90

Profit and Loss, December 31, 1911

Adjustment of claims, prior years business	$ 3,486.24
Balance Dec. 31, 1911	5,953,531.26
Total	$5,957,017.50
Balance Dec. 31, 1910	$4,190,771.50
Balance from income account	1,766,246.00
Total	$5,957,017.50

The tenth annual report of the United Railways Investments Co. for the fiscal year ended December 31, 1911, has been issued by Mason B. Sterling, president. This company is proprietor of the United Railways of San Francisco and the Sierra & San Francisco Power Co.

Gross earnings	$7,886,136.08
Operating expenses and taxes	4,706,970.98
Net earnings	$3,179,165.10
Other income	264,626.78
Gross income	$3,443,791.88
Current income charges	282,802.76
Net income before bond interest charges	$3,160,989.12
Bond interest	1,812,410.00
Net income for the year	$1,348,579.12

From the above net income the following appropriations were made:

For renewals, depreciation and contingencies	$473,168.16
For bond sinking fund reserve	339,619.55
For dividends on first preferred stock	350,000.00

Sierra & San Francisco Power Co.

Gross earnings	$834,324.38
Operating expenses and taxes	258,271.11
Net earnings	$576,053.27
Deductions from income, including interest on first mortgage bonds and interest on second mortgage series 'A' bonds, etc.; less interest received on unexpended balances	328,325.90
Net income before allowing for depreciation	$247,727.37

Generated on 2024-09-29 23:50 GMT / https://hdl.handle.net/2027/uiug.30112007837674
Public Domain, Google-digitized / http://www.hathitrust.org/access_use#pd-google
Digitized by Google
Original from UNIVERSITY OF ILLINOIS AT URBANA-CHAMPAIGN

Engineers' Note Book

Explosives in Road Making

By Z. Cushing

To a person familiar with explosives, the method employed in building roads, railroad grades, and like work, seems costly and slow. Usually a six horse or mule team is hitched to a plow with two, three, or even four men to manipulate the outfit. One man drives, one walks at the plow handles to guide the plow, and two exert all the energy and strength they possess to hold down the beam. The best depth that can be obtained by use of the plow is about 18 in., and the ground would have to be soft to permit even that depth. When this 18 in. of loosened dirt has been removed by the scrapers, the ground is again plowed, and this alteration of processes is continued until the depth called for by grade-stakes is obtained. Plowing with explosives, however, is cheap and effective, and is rapidly coming into favor.

Since a hole can be bored by a dirt auger in any ground that could be broken by a plow, it is more economical to do away with the men, mules, and plow, and use powder. This can be easily accomplished by the following method: Take a 2-in. dirt auger and put down holes in the centre of the grade to a depth of 6 in. below subgrade, and about 6 ft. apart. Load these holes with a low-grade dynamite, such as Red Cross 25% or Atlas Stumping (the amount of powder to be used depending on depth of hole), fire the dynamite, and the ground will be plowed and ready for the scrapers. This does not have to be repeated, as with the men, mules, and plow, for the ground is broken to the required depth by one round. If the roadbed be wider than 8 ft., then two or even three sets of holes may be required. If the cost of this method of dynamiting a grade is carefully studied, it will be found that the cost of dynamite to do the work will be less than the cost of feeding the mules, to say nothing of the wages for the men. Only one man is necessary to put down the holes, and load and shoot them. No matter how soft the ground may be, the use of dynamite to loosen it will result in a large saving of cost.

In a plain slide-valve engine, to find the amount of lap required to cut off steam at a given point in the stroke, use the formula below:

T = travel of valve
L = length of stroke
s = length of stroke performed before cutting off
l = lead of valve

$$\text{Lap} = \frac{T}{2}\left(\sqrt{\frac{L-s}{L}}\right) - \frac{l}{2}$$

If the factors given on the steam port opening is P, the lead of valve l, and the fraction of the stroke to be completed when cut off occurs is x, then,

$$L = \left\{\frac{\sqrt{x}}{1-\sqrt{x}}\left(P - \frac{l}{2}\right)\right\} - \frac{l}{2}$$

In Hencks formula for the elevation of outer rail in curves, where

G = gauge in feet
V = velocity in feet per second
R = radius

then

$$\text{Elevation in feet} = \frac{G\,V^2}{32.2\,R}$$

Rankin's formula for the greatest dead load that a pile will bear without sinking is as follows:

W = weight of ram or monkey
H = height of fall of same
D = depth driven by last blow
S = sectional area of pile in square inches
L = length of pile in feet
E = modulus of elasticity of material of pile

$$P = \sqrt{\left(\frac{4\,E\,S\,W\,H}{L} + \frac{4\,E^2\,S^2\,D^2}{L^2}\right)} - 2\,\frac{E\,S\,D}{L}$$

According to J. F. C. Snell, in order to determine the relative humidity of air where a cooling tower is to be erected, where

F = vapor pressure corresponding to temperature T of the dry bulb in deg. Fahrenheit.
F′ = vapor pressure corresponding to the reading T′ of the wet bulb
L = height of the barometer in inches of mercury
R H = relative humidity

$$R\,H = \frac{F' - L\,(T - T')}{2610 \times F}$$

Generated on 2024-09-29 23:43 GMT / https://hdl.handle.net/2027/uiug.30112007837674
Public Domain, Google-digitized / http://www.hathitrust.org/access_use#pd-google
Digitized by Google
Original from UNIVERSITY OF ILLINOIS AT URBANA-CHAMPAIGN

Engineering News

Irrigation and Water Supply

Sunol.—It has been announced that the Spring Valley Water Co. will construct a pipe-line from its watersheds in the vicinity of Sunol to the town of Sunol for domestic purposes.

Reclamation

Arizona-Salt river project is 93.5% completed. Arizona-California-Yuma project is 65.7% completed. California, Orland project is 84% completed. Colorado, Grand valley project, preliminary work. Colorado, Uncompahgre valley project is 53.2% completed. Idaho, Boise project, exclusive of Arrowrock reservoir, is 90% completed; Arrowrock reservoir is 16.5% completed. Idaho, Minidoka project, gravity unit, is completed; south side pumping unit is 90% completed. Montana, Blackfeet project, Two Medicine unit, is 57.5% completed; Badger-Fisher unit is 10.8% completed. Montana, Fort Peck project, no work done during month. Montana, Flathead project, Jocko division is 84% completed, Mission division is 10.7% completed, Pablo division is 32.4% completed, Polson divison is 9.9% completed, Post division is 32.9% completed. Montana, Huntley project is 96% completed. Montana, Milk river project is 12% completed. Montana, Sun river project is 8.5% completed; Fort Shaw unit is completed. Montana-North Dakota, Lower Yellowstone project is 95% completed. Nebraska-Wyoming, North Platte project is 81% completed. Nevada, Truckee-Carson project is 65.5% completed. New Mexico, Carlsbad project is completed. New Mexico, Hondo project is completed. New Mexico-Texas, Rio Grande project, storage unit, preliminary work; Leasburg unit is completed. North Dakota, Missouri river pumping project, Buford-Trenton unit is 38% completed; Williston unit is 64% completed. Oregon, Umatilla project is 83.7% completed. Oregon-California, Klamath project is 70% completed. South Dakota, Belle Fourche project is 92.5% completed. Utah, Strawberry valley project is 57% completed. Washington, Okanogan project is completed. Washington, Yakima project, storage unit is 15.7% completed; Sunnyside unit is 87% completed; Tieton unit is 97% completed.

Railways

San Francisco.—The Southern Pacific Co. has completed final surveys for a new low-grade line extending from the Inland Empire district in eastern Washington on the north to Mohave, California, on the south. It is stated that construction work will be commenced at an early date. The San Jose Terminal Railway Co. has filed an application with the State Railroad Commission for permission to sell $950,000 in bonds and 350,000 shares of preferred stock, par value $1 per share, for the purpose of completing a combined electric and steamship line for traffic between San Francisco and San Jose at a total expenditure of $1,300,000. John A. Mehling is vice-president and M. J. Gardner is secretary.

The following statement, filed in the office of the U. S. Supervising Inspector, John K. Bulger, shows the number of passengers carried on the ferries to and from San Francisco during the year 1911 as compared with 1910.

	1911.	1910.
Southern Pacific, Oakland and Alameda	18,133,396	18,000,000
Key Route, Oakland	13,383,655	12,252,649
Western Pacific, Oakland	83,165	18,485
Santa Fe, Richmond	244,369	201,496
Northwestern Pacific, Sausalito	5,316,815	5,077,938

Statistics have been compiled and filed in the office of the U. S. Supervising Inspector of Steam Vessels giving the following figures for the number of passengers carried by Sacramento and San Joaquin river steamers:

Monticello S.S. Co. (Vallejo)	516,630
Southern Pacific Co. (Sacramento)	98,561
Southern Pacific Co. (Vallejo Junction)	259,483
Southern Pacific Co. (Port Costa)	23,864
Cal. Nav. & Imp. Co. (Stockton)	43,395
Cal. Trans. Co. (Sacramento)	48,096
Cal. Trans. Co. (Stockton)	21,419
Cal. Trans. Co. (Mokelumne river)	2,031

Sacramento.—Articles of incorporation have been filed with the Secretary of State at Sacramento by the Valley Railroad Co., authorized capital stock $5,000,000. It is stated that an electric railroad will be built connecting with the Oakland, Antioch & Eastern railroad in Solano county and extend through Yolo, Colusa, Glenn, and Tehama,

Generated on 2024-09-29 23:43 GMT / https://hdl.handle.net/2027/uiug.30112007837674
Public Domain, Google-digitized / http://www.hathitrust.org/access_use#pd-google
Digitized by Google
Original from UNIVERSITY OF ILLINOIS AT URBANA-CHAMPAIGN

terminating at Red Bluff. The Big Four Electric Railway Co. of Tulare, California, filed articles of incorporation at Sacramento on May 20, authorized stock $500,000. It will build an electric railway which will run from Tulare to Woodville, Popular, and Porterville. A branch will be built from Tulare to Visalia. The main offices of the company are in the Ham building, on Kern street, Tulare, California.

Oakland.—The Oakland & Antioch Electric railroad expects to complete its tunnel within four months and will have track in position through the tunnel by October 1. Hugo Arnstein is president. The company expects to make connection with the proposed new electric line which will run from Red Bluff to Dixon for a total length of 160 miles.

San Leandro.—The Southern Pacific Co. has let contracts for grading and road work on the Melrose-San Leandro extension to its suburban electric railroad service.

Fresno.—The Big Creek railroad from Friant to Big Creek will be ready for operation by July 1. Stone & Webster are the contractors.

San Mateo.—It is stated that the United Railroads will start work at once on the extension of its line from the Southern Pacific terminus in San Mateo to a point two miles south.

San Bernardino.—Engineers in the employ of the Santa Fé railroad are at work establishing a 2.2% grade between this city and the summit. A tunnel is to be driven and approximately $1,000,000 will be spent on new construction at this point.

Portland.—It is stated that the allied Hill railroad interests will construct a terminal at Portland at an expense of approximately $3,000,000.

Seattle.—The Seattle, Renton & Southern railroad, an electric interurban line, was declared bankrupt on May 14. E. M. Mills and O. B. Collins have been appointed receivers.

Denver.—The Denver, Northwestern & Pacific railroad and the Denver Railways Securities Co. were placed in the hands of receivers on May 1. D. C. Dodge and Samuel M. Perry were made receivers for the railroad and William W. Watson was appointed receiver for the Securities company. The receiverships are said to have been due to inability to meet the interest and principal on $3,500,000 notes which became due.

Miscellaneous Engineering Construction

San Francisco.—Contract for constructing 43 cars for the municipal railway on Geary street has been awarded by the Board of Public Works to W. L. Holman & Co. at a price of $7700 each, with $1500 each for four extra trucks. Delivery is to be made within 270 days. The Board of Public Works also awarded a contract to the Pacific Gas & Electric Co. for electric power, the cost being 1c. per kilowatt-hour for direct current; alternating current was offered at 0.85c. per kilowatt-hour. The contract for the general construction of the Islais creek garbage incinerator was awarded to McLane, Hegen & Aden for $62,155. The contract for the steel frame for the building was awarded to the Judson Manufacturing Co. for $6500. The Board of Harbor Commissioners has awarded a contract for a locomotive to be used on the belt line to the Baldwin Locomotive Works at a price of $10,500. A contract for oil-burning apparatus for docks and dredges, amounting to $10,205.15, was awarded to the United Engineering Works. Contract for rolling doors for piers No. 30 and 32 has been awarded to the Lilley & Thurston Co. at a price of $62,270. A sale of 24,000 acres of timber land in Mendocino and Sonoma counties has been made by the Empire Redwood Co. to a new company composed of E. B. Salsig and D. W. Shanks of Los Angeles, W. I. and J. W. Hupp of San Francisco, James H. Borden of Gualala, and H. A. Richardson of Mendocino county.

San Leandro.—The Chamber of Commerce has sent a petition to Congress asking for an appropriation for making a hydrographic and geodetic survey of San Leandro bay.

Richmond.—Col. Thomas H. Rees, United States Engineer, has approved the survey of Richmond harbor. When the official sanction has been received from Washington, a bond election will be held for the purpose of securing funds for carrying on the work.

Fowler.—The Fowler Chamber of Commerce is circulating a petition calling for a town election to ratify a sewer bond issue of approximately $28,000.

Fresno.—The Caliente Lime & Marble Co. has been incorporated, with headquarters at Fresno; capitalization, $75,000. Directors

Generated on 2024-09-29 23:42 GMT / https://hdl.handle.net/2027/uiug.30112007837674
Public Domain, Google-digitized / http://www.hathitrust.org/access_use#pd-google
Digitized by Google
Original from UNIVERSITY OF ILLINOIS AT URBANA-CHAMPAIGN

are A. A. Chevalier, P. Justy, F. J. Stone, Martin Ybarron, and Juan Silzalde.

Hanford.—The City Trustees are investigating means for the disposal of sewage. A bond issue will shortly be placed before the people to provide funds for reconstruction of the town sewer system.

Oakdale.—All the tunnels of the north side of the Stanislaus river in the Oakdale irrigation district are completed.

San Bernardino.—It has been announced that the city of Redlands will use the watersheds of San Bernardino for the purpose of furnishing a water-supply; $600,000 is to be spent in a new water-distribution system; bonds are to be issued to provide funds for this purpose.

Los Angeles.—The city of Hermosa Beach has ratified the issue of $60,000 in bonds for the construction of a new pier. The pier is to be of reinforced concrete, 1000 ft. in length, 300 ft. of which is to be 100 ft. wide and the rest 25 ft. wide.

Washington, D. C.—The House appropriation bill for rivers and harbors provides $800,000 for the Columbia river between Celilo falls and The Dalles; $50,000 above Celilo falls; Columbia river, Oregon slough, $50,000; Columbia and lower Willamette rivers, $150,000; Los Angeles harbor, $327,250; Oakland harbor, $130,000; Nehalem bar and harbor, $100,000; Yukon river, Alaska, $130,000; Valdez, Alaska, $55,000.

Streets and Roads

San Francisco.—Good progress is being made by the State Highway Commission in preparing for the new state highway. It has been announced that the first work to be done will consist of five miles of asphalt pavement on a cement-concrete base, from the San Francisco-San Mateo county line to Burlingame. The survey between the Stanislaus line and Madera has been completed and plans have been forwarded to Sacramento. A survey of 51 miles between Fresno and Ripon has been completed. Surveys between Fresno and Madera are under way. A new highway is under construction in San Benito county which will run from the New Idria quicksilver mines through Silver Creek to the county line between Fresno and San Benito. The work is being done by the mining company.

Oakland.—The Board of Supervisors has endorsed the projected road from Niles to Sunol through Niles canyon. The road is to be paid for out of the county's general fund.

Santa Cruz.—The Supervisors have ordered a section of road from Arana gulch to Soquel and the section from the main road at Arana gulch to Rodeo to be macadamized.

Richmond.—Rights-of-way for the boulevard to be built between this city and Oakland have been secured, and a large force of men is at work. It will be exclusively for the use of automobiles.

Porterville.—The Chamber of Commerce and the financial interests have petitioned the Board of Supervisors to call for a special issue of bonds amounting to $2,000,000 to provide funds for the construction of 190 miles of asphalt and macadam roads.

Cheyenne, Wyo.—Surveys are under way for construction of a new road through Laramie, Converse, Natoma, Fremont, Washakie, Hot Springs, and Park counties. Everett Glafcke is surveyor.

Power, Gas, and Electricity

San Francisco.—The Indian Valley Light & Power Co. of Seneca, Plumas county, California, has filed application with the State Railroad Commission for permission to issue $145,000 in new stock for the purpose of providing funds for the construction of a new power plant at Seneca. The Sierra & San Francisco Power Co. has been granted permission by the State Railroad Commission to exercise its rights in Gilroy, Morgan Hill, and San Benito county for the extension of its power-transmission lines. The Great Western Power Co. has petitioned the State Railroad Commission for permission to extend its power service in Napa, Sonoma, Marin, and Solano counties.

Alameda.—Voters of Alameda county have ratified a proposal to issue bonds for $150,000 for electric lighting betterments.

Stockton.—The Western States Gas & Electric Co. is making plans for the expenditure of $200,000 for the installation of an underground service system. W. S. Butler is general manager and J. M. Byllesby Co. are engineers.

San Jose.—The Sierra & San Francisco Light & Power Co. has petitioned the San Bernardino county board of supervisors for permission to extend its line in San Benito county to serve the city of Hollister and other towns in the Salinas valley.

Generated on 2024-09-29 23:41 GMT / https://hdl.handle.net/2027/uiug.30112007837674
Public Domain, Google-digitized / http://www.hathitrust.org/access_use#pd-google
Digitized by Google
Original from UNIVERSITY OF ILLINOIS AT URBANA-CHAMPAIGN

Visalia.—The Mt. Whitney Power Co. has commenced construction of a new substation at Lindsay to cost $50,000.

Bakersfield.—The Southern California Gas Co. is preparing to supply San Bernardino and contiguous territory with natural gas from the Midway field. C. M. Grow is general manager.

San Luis Obispo.—The San Joaquin Light & Power Co. is contemplating construction of a 10,000-volt transmission line 27 miles long. This line will run through the old district of McKittrick, Belridge, and Lost Hills. A. E. Wishon is general manager.

New Westminster, B. C.—The factory of the Royal City mills, including power-plant, loading platform, and docks were burned on May 14; loss, $100,000.

Petroleum

California's gross production of crude petroleum during April amounts to 7,222,795 bbl. The total stocks in the state on April 30 were 43,899,197 bbl., an increase of 893,888 bbl. over the total stocks on hand on March 31. The rate of production thus far for the year is 86,673,540 bbl. by December 31, 1912, an estimate that is very encouraging to intending large consumers all over the world, and that assures a plentiful supply of crude fuel oil for the Panama Canal trade in 1915. The following is the tabulated statement by fields:

	April. (Bbl.)	March. (Bbl.)
San Joaquin:		
Coalinga	1,544,897	1,692,524
Kern River	930,482	934,484
McKittrick	461,267	484,351
Sunset-Maricopa	449,846	434,150
Midway	1,934,387	1,933,369
Lost Hills	105,241	78,934
Totals	5,426,120	5,557,812
Coast:		
Santa Maria, Lompoc Cat Canyon	439,332	418,923
Summerland	4,350	4,350
Totals	443,682	423,273
Southern:		
Fullerton	484,574	471,775
Salt Lake	224,537	227,362
Whittier	56,689	64,552
Coyote	79,926	90,742
Los Angeles City	31,842	31,842
Ventura county	43,593	45,632
Newhall	9,990	10,918
Totals	941,151	878,957

Stocks on Hand April 30.—The list of crude stocks on hand follows:

	Stocks		
	Field.	Pipe-line.	Total.
Coalinga	359,767	2,536,093	2,895,860
Kern River	499,600	26,579,757	27,079,357
McKittrick	192,550	623,551	816,101
Sunset-Mari	513,047	256,580	769,627
Midway	1,305,530	507,366	1,812,896
Lost Hills	36,350	200,152	236,502
Santa Maria	345,648	292,065	637,713
Fullerton	84,725	213,658	298,383
Salt Lake	116,509	47,465	163,974
Whittier	30,608	.....	30,608
Coyote-La H.	25,389	.....	25,389
Los Angeles	15,000	448,128	463,128
Ventura	51,761	40,662	92,423
Newhall	6,793	.....	6,793
Miscellaneous	.....	8,570,743	8,570,743
Totals	3,583,377	40,316,220	43,899,497

Kern county is producing about 50,000 bbl. of oil per year, which is about two-thirds of California's total production, one-fourth of the production of the United States, and between one-seventh and one-sixth of the entire production of the world.

Coalinga's Output for April.—R. W. Dallas, manager of the Coalinga branch of the Independent Producers' Agency, has prepared a report of the April production in the Coalinga fields which shows a slight falling off in comparison with the figures of the preceding month. The following is the report:

	East Side.	West Side.	South Field.	Total Apr.	Total Mar.
Wells susp.	12	20	28	60	65
Wells drilling.	43	44	5	92	91
Wells pro. sus.	26	185	0	211	207
Wells pro.	304	499	0	803	827
New rigs	1	0	0	1	1
New rigs susp.	7	30	11	48	54

	East Side.	West Side.	Total April.	Total March.
Storage	59,727	300,190	359,917	412,058
Shipments	739,204	929,554	1,668,758	1,611,154
Production	.....	.....	1,616,617	1,683,109

Lost Hills.—The Standard Oil Co. is preparing to lay a third pipe-line, 12 in. diam., from Midway to Bakersfield. It will also build a pipe-line from Pond to Lost Hills. This line will be 10 in. diameter, 25 miles long, and will require 1200 tons of pipe.

Santa Barbara.—It is stated that the General Petroleum Co. has purchased the holdings of the Bear Creek Oil Co. in the Midway field. The amount involved in the purchase is approximately $735,000.

The General Pipe-Line Co. of San Francisco will build a 6-in. pipe-line for the

Generated on 2024-09-29 23:41 GMT / https://hdl.handle.net/2027/uiug.30112007837674
Public Domain, Google-digitized / http://www.hathitrust.org/access_use#pd-google
Digitized by Google
Original from UNIVERSITY OF ILLINOIS AT URBANA-CHAMPAIGN

transportation of lighting oil from the Lost Hills and Belridge district through North Midway to Los Angeles. This company is also building an 8-in. line from Maricopa to Los Angeles and will also lay a 12-in. gas line from Taft to Los Angeles. The main line will be 200 miles long, will include 12 pumping stations, and will cost approximately $3,500,000. The capacity will be approximately 24,000 barrels of oil per day.

San Francisco.—It has been announced that the Palmer Union Oil Co. of California, Frank L. Brown president, has obtained $1,500,000 additional English capital for the purpose of further development of its properties. The sale of this company to English capitalists as announced last month did not take place as stated.——John K. Bulger, U. S. Supervising Inspector, has completed a list of vessels building and nearing completion which will burn crude petroleum. The total aggregate tonnage is 51,900 and their annual consumption of fuel oil will be approximately 1,450,000 barrels.

Name of Vessel and Owner.	Gross Tons.
Cricket, Fred Linderman	1,200
Avalon, Hart Wood Lumber Co	1,000
San Ramon, S. J. Dodge Co	1,000
Davenport, J. O. Davenport	1,000
Siskiyou, E. K. Wood	1,000
Nechanicum, Hammond Lumber Co	800
Richmond, Standard Oil Co	4,900
El Sepundo, Standard Oil Co	3,700
Captain Lucas, Standard Oil Co	4,000
Columbia, Wilson Bros	2,500
Cordova, Alaska Steamship Co	2,500
California, Olson & Mahony	2,500
John A. Hooper, Sudden & Christensen	2,500
Speedwell, Southern Oregon Co	900
Eureka, Pacific Coast Steamship Co	2,300
Not named:	
Matson Navigation Co	8,000
Smith Lumber Co	4,000
Esterbrook & Co	900
Loop Lumber Co	1,800
Eschen & Minor	1,800
Swayne & Hoyt	1,600
McCormack & Co	1,000
McCormack & Co	1,000
Total	51,900

Fresno.—The Little Jack Oil Co. has been incorporated; capital stock $100,000. The directors are Thomas Downing and Joseph Schnereger of Hanford, A. L. Kreis, J. H. Burnett, and Lewis H. Smith of Fresno.

San Luis Obispo.—The German-American Petroleum Co. has ordered in Germany the largest oil engine tanker in the world. It will be 525 ft. long, will have a capacity of 16,000 tons, and an ocean speed of 10 knots per hour. The Antwerp Industrial Co. is also having a large tanker built by the Netherlands Shipbuilding Co. to have a capacity of 9600 tons. Both of these vessels are to be used in the California oil ocean carrying trade.

Fort Worth, Texas.—The new oil refinery of the Gulf Refining Co. at Fort Worth is finished and its pipe-line from the Electra field is delivering large quantities of oil for the plant and for fuel purposes. The Pierce-Fordyce Oil Association has also finished its new refinery at Forth Worth. The Texas company and the Magnolia Petroleum Co. are making good progress in the laying of their respective oil pipe-lines between Electra, Dallas, and Beaumont.

United States Reports.—Petroleum and its products ranked second in value among the exports during April from all ports of the United States, cotton ranking first with a valuation of $39,130,348. For the preceding ten months the same rate was maintained. There were imported into San Francisco during April 597,333 gal. of benzine, valued at $38,960; 1,132,480 gal. of crude, valued at $24,264, all from Peru. It may appear strange that crude petroleum should be imported into California, but the explanation is given that such oil is of very high grade, and obtained very cheaply, for refining purposes. The exports of crude petroleum and its products from San Francisco during the month of April were: Crude, 5,524,300 gal., valued at $110,689; naphthas, 203,472 gal., value $29,979; illuminating, 10,279,791 gal., value $449,017; lubricating, 86,846, value $22,694; residuum, 12,198,704 gal., value $183,576; asphaltum, 2489 tons, value $33,740; making a total valuation of exports, $819,695.

Current Fuel Oil Prices.—Average prices, f.o.b. shipping points, except where otherwise specified:

TEXAS	
Humble	$0.85
Houston	0.85
Port Arthur	0.85
Sabine	0.85
Fort Worth, Corsicana, Dallas	0.85
OKLAHOMA	
Tulsa	0.70

Generated on 2024-09-29 23:45 GMT / https://hdl.handle.net/2027/uiug.30112007837674
Public Domain, Google-digitized / http://www.hathitrust.org/access_use#pd-google
Digitized by Google
Original from UNIVERSITY OF ILLINOIS AT URBANA-CHAMPAIGN

LOUISIANA

Vinton	0.75
Mississippi river, delivered	0.95

MISSOURI

Kansas City, tank wagon delivery	0.95
Sugar Creek, f.o.b. cars	0.85

CALIFORNIA

San Francisco bay, delivered	$0.50 to 0.55
Los Angeles district, delivered	0.70 to 0.75

DAILY PRODUCTION OF GULF COAST DISTRICTS

District.	May 15, barrels.
Spindletop	2,150
Sour Lake	3,160
Humble	5,855
Batson	2,422
Saratoga	3,110
Markham	2,200
Vinton	3,300
Jennings	3,550
Goose Creek	400
Pine Prairie	100
Total	26,247

Foreign.—The production of the Baku field in February, from all districts, amounted to 3,837,720 bbl., an average of 132,340 bbl. per day. In January the total output was 4,079,232 bbl., and a daily average of 131,588 bbl. These show a decrease for the month of February of 241,512 bbl., and an increase in the daily average output of 752 bbl. In December the production of the field was 4,209,123 barrels.

The production of the Grosny oilfields in February amounted to 642,352 bbl., an average of 22,150 bbl. per day. In January the output was 669,760 bbl., and a daily average of 22,250 bbl. The decline in February amounted to 57,408 bbl. in the total and 100 bbl. in the daily average.

The decrease in the two fields amounted to nearly 299,000 bbl., as compared with the January output.

There was an increase in the stocks in the Grosny field from 164,208 bbl. February 1 to 221,927 bbl. on March 1.

Panama-Pacific Exposition

The first annual statement of receipts and expenditures for the Panama-Pacific Exposition has been made public. Of the total amount subscribed for stock, 28.15% has been collected, leaving a balance due of $4,358,100.34. Detail figures are as follows:

INCOME

Payments on subscriptions		$1,707,689.66
From other sources		17,659.99
		$1,725,349.65

EXPENDITURES

Preliminary expense, period ended Sept. 30, 1911	$377,515.01	
Permanent period expense, commenced Oct. 1, 1911	140,792.61	
Exposition site expenditures	430,999.40	
		949,307.02
Balance unexpended		$776,042.63
Represented by—		
Cash deposits as securities on leases	$133,000.00	
Accountable advances	3,854.20	
Items in suspense	2,295.35	
Stores, supplies and postage	1,073.26	
Cash	831,296.01	
	$971,518.82	
Less accounts payable	195,476.19	
	$776,042.63	

STOCK SUBSCRIPTIONS

Total signed to date		$6,065,790.00
Number of subscribers	14,305	
Collections on subscriptions	28.15%	1,707,789.66
Balance of subscriptions		$4,358,100.34

Generated on 2024-09-29 23:42 GMT / https://hdl.handle.net/2027/uiug.30112007837674
Public Domain, Google-digitized / http://www.hathitrust.org/access_use#pd-google
Digitized by Google
Original from UNIVERSITY OF ILLINOIS AT URBANA-CHAMPAIGN

Markets

MATERIALS FOR CONSTRUCTION

(San Francisco prices, May 31.)

Shapes—Angles, tees, and channels, 3 in. and under, $2.35 per 100 lb.; over 3 in., $2.25 per 100 lb.; I-beam. 4 in. to 15 in., $2.35 per 100 lb.

Bar Steel—Rounds and squares, $2.25 base per 100 lb.

Wire Nails—$2.55 base per 100 lb.

Black Sheet Steel—No. 18-20, $3.45; No. 22-24, $3.50; No. 26, $3.55; No. 27, $3.60; No. 28, $3.65; No. 30, $3.85.

Steel Plates—No. 16, $2.85; No. 14, $2.75; No. 12, $2.70; No. 8, $2.40; No. 10, $2.55; 3/16, $2.35; ¼ in. and heavier, $2.25; all per 100 lb.

Rails—Steel T, 8-lb., $2.15; 12-lb., $2.05; 16-lb., 20-lb., and 30-lb., $2.

Pig Iron—No. 1 Scotch, $25.00 to $27.50.

Coke—German Syndicate, forked foundry, $16 to $17.50 per long ton; average to arrive ex-ship, $14 to $15 per long ton.

Portland Cement—In sacks, $2.25 per bbl.

Lime—$1.50.

Fire-Brick—Imported Carr, Cowen, or Snowball, $50 per 1000; domestic Livermore, $38 per 1000.

Fire-Clay—$10 per ton.

OIL SHARES

(By courtesy of San Francisco Stock Exchange, May 29.)

	Bid.	Ask.		Bid.	Ask.
Amal	75.00	80.00	Paraffine	.50	..
Assd Oil	44.50	..	Palmer	.51	..
Caribou	1.00	*1.10	do Union.	.18	..
Claremont	..	.58	Premier	..	.53
Coal Cent.	.20	..	Republic	.30	.33
De Luxe	.75	..	S F & McK.	12.25	..
Empire	1.20	..	SauerDough	1.15	1.25
Illinois Crd.	..	.16	Silver Tip.	.90	..
Maricopa 36	..	.65	S W & B.	.20	..
do Natl.	.23	..	Sterling	1.47	..
McKittrick.	.09	..	Turner	.75	..
Mid Premier	..	.38	United Oil.	.30	.32
Monte Cristo	1.30	1.37	W K Oil	2.10	..
New Pa Pet.	..	.48			

CALIFORNIA OIL DIVIDENDS FOR APRIL.

California oil companies paid out in dividends during April $587,568. In addition to this amount the Mexican Petroleum paid $80,000 on its preferred stock, making a total of all companies controlled in this state of $667,568. The list follows:

Amalgamated	$1.00	$100,000.00
Caribou	0.025	8,070.30
Central	0.015	15,400.00
Claremont	0.015	7,500.00
Columbia	0.01	9,992.26
Home	0.01	7,500.00
Homestake	0.10	1,000.00
Monte Cristo	0.025	12,500.00
*Mount Diablo	0.01	5,000.00
New Pennsylvania	0.005	2,500.00
Olinda Land	0.005	10,000.00
Paraffine	0.01	3,000.00
Record	..	10,000.00
Rice Ranch	0.015	4,500.00
San. Fran. & McKittrick	0.10	5,000.00
Sauer Dough	0.02	4,000.00
Section 25	0.50	20,000.00
*State Consolidated	0.005	5,000.00
Traders	0.006	9,000.00
Union	0.006	183,387.50
Union Provident	..	90,767.60
United Petroleum	..	48,450.60
Western Union	0.01	10,000.00
W. K.	0.03	15,000.00
Total California companies		$587,568.26
Mexican Pet., Ltd., pfd		80,000.00
Total all companies		$667,568.26

*Unlisted.

SAN FRANCISCO QUOTATIONS.

(San Francisco Stock & Bond Exchange April 29.)

LISTED

	Bid.	Ask.		Bid.	Ask.
Assd Oil 5	102¼	102½	Oak W g 5	95	..
Bay C P 5	101½	102½	Om Ca R 6	..	103
CC G&E 5	103	..	Oro Elec 6	97¾	98
CE ser A 5	87	..	PacGas I 4	88¾	89¼
C G & E 5	102	..	Pac G&E 5	91½	92¼
do Un 5.	96¼	96½	Pac ER 5	104¾	..
Cal-stCa 5	102	..	Pac L&P 5	..	97
Cal W As 5	97	98	do gtd 5.	99	..
Cen C Trc 5	95¼	..	PacT&T 5	100¼	100⅜
City Elec 5.	90½	..	P & C H 6	..	100½
C C Wat 5.	97½	100	P & O R 6	100	..
do g m 5.	..	96	Peo Wat 5.	75	75⅜
E E L A 5	102	..	S EG&R 5	103¼	104
E L & P 6	105	..	S D&Cuy 5	97½	..
F & CH 6	100¼	..	S J L&P 5.	99⅛	..
HR T&L 6	105½	..	do ser A 6.	100	101
Lk Tahoe 5	..	96	S F E R 5.	..	90
L Bch Gs 6	100	..	SFN&CR 6	102	..
Ls An E 5.	99¾	..	SFO&SJ 5	105	..
LA G&E 5	100	..	do 2m 5.	..	97
do Corp 5	98¼	..	do Con 5	93¼	..
Ls An R 5	107½	..	SJ&SC 4½	..	88
do Corp 5	..	99	SB G&E 6	100¾	..
L A Ltg 5	100	..	S R of C 6.	..	102
LA-P 1c 5	105	..	SP 1c g 5	112¾	..
L A-P C 5.	..	100¼	S P Br C 6	..	127¼
MarW&P 5	90	100	SP1st ref 4	95	95¼
Mkt-stCa 6	..	100½	S V g m 4.	94½	94¾
do 1c m 5	..	92	U G & E 5	101¼	..
MV&MT 5	100	..	U R S F 4.	67	67½
Nat Con 6.	93¾	..	Val C P 5	101½	102
NR of C 5	112¾	..	Marin Co.	53½	..
N Cal R 5	106½	..	Peo W pfd.	49½	52
NCal Pr 5	100¼	..	Spring Val	63¼	63¾
do Con 5	..	93½	NCal Pr Cn	..	50
N Elec 5.	93¼	..	Oro El pfd.	..	76
OG L&H 5.	..	102½	do com..	16½	18
OakTran 6	107	..	Oro Water	100	..
do 5	..	106	Pac Lt pfd.	74	75¼
do Con 5	102¼	102½	do com..	..	81
OakTrc c 5	..	98½	California	124¾	..
do 5	..	90¾	SF-OTApfd	85	90

UNLISTED

	Bid.	Ask.		Bid.	Ask.
Am RivE 5	96½	..	Oak RR 6	100½	..
Bay C P 5	103½	104½	Oak&A Ry	20	..
Blue LW 5	102½	..	do 5	83½	85½
CC G&E 5.	92	..	Oro Dev.	45	..
Cal E gen 5	87¼	..	OW L&P 6	..	101¼
do pfd.	70	..	Pac P Cem	70	77½
C&N W 5	104	104¾	Pac G & E	91½	91¾
C C L & P.	..	85	do com..	63¾	..
C G Pr bds	92¾	93	do 5	104½	..
do 5	91	91¾	do rites.	..	45c.
E S W 5.	..	100	Pac Un Cl.	78	90
Ewa E S.	34	34½	Peo W com	3¼	3½
Gas Con As	..	29	P & C Ry.	12¼	..
Gt W pfd.	61¼	..	Pet&S RR	..	96
do com..	32	35½	do stock.	12	25
HuntL&I 6	100	103	Riversd Cem.	..	75
Kern L Co.	180	..	SF&SJV 5	110¾	111⅛
Keswick c 6	..	102½	SF & NP 5	104⅜	104½
Key R pfd.	83	..	S P C R 5.	92½	95½
do com.	..	29	StdPrt Cem	18	..
LtL&P bds	65½	..	do 6	90	91
do com..	..	80½	SFG &Coke	..	15
L&P G C 6	..	98	SF G&E 5.	..	95
do dev 5	60	..	do n c 4½	..	93¼
L & A Ry.	99	104¾	S J Water	105	..
Met Gas 5	..	100	SJTermR 5	..	75
Mut Elec 5	97	..	S.C PrtCem	42	..
MW P&E	101½	..	do 5	89⅝	90
Nat Con	13½	16	Sis L&P 6.	90	..
do 2	71	72½	S Yuba 5	..	108½
NatD Co 6	100	101	StdElec 5c	92	93¼
Nat I C S.	50	..	Sutter St 6	..	98
Nat L&M 6	..	101¼	Turlock Irr	..	95
NP C R 5.	99⅞	100¼	West Pac.	..	10½
N W Elec.	8	20	do 5	83⅝	..
Oahu R R	152½	..	West Am R	10	..
OcnShore 5	..	12	West P C.	33	35
OC nw stk.	9½	13	do pfd.	..	61
Ocn S S 5.	100	..	West S L.	12	13
OakTrc pfd	83	..	WPG&Epfd	22½	..
do com..	30	40	Yos Val R.	..	89

Generated on 2024-09-29 23:41 GMT / https://hdl.handle.net/2027/uiug.30112007837674
Public Domain, Google-digitized / http://www.hathitrust.org/access_use#pd-google
Digitized by Google
Original from UNIVERSITY OF ILLINOIS AT URBANA-CHAMPAIGN

Industrial Progress

Water-proofing the Twin Peaks Reservoir

By W. W. THURSTON*

The cement gun, which has recently been introduced in San Francisco, and about which much has been written, has demonstrated its effectiveness in a striking manner in connection with the completion of the Twin Peaks reservoir of the new high-pressure gre-protective system for the city of San Francisco.

The reservoir, which has a capacity of 11,000,000 gallons, is divided in the centre by a wall of reinforced concrete 1 ft. wide and 27 ft. high, supported by large buttresses every 8 ft. on each side, making a total superficial area of approximately 3200 sq. yd. When starting to fill one side of the reservoir, it was found that this wall, which had been covered by two coats of cement wash, leaked considerably under a head of 5½ ft., and the cement gun was selected as the quickest and most economical means of rendering it waterproof.

Two guns were used in the operation, as ten days only were allowed by the City Engineer for completion of the work. The mixture used consisted of 1 to 3 cement and sand, with hydrated lime added equal to 5% of the volume of sand. This mixture was used in place of the usual 1 to 4 mix, in order to make perfectly sure that the wall would be waterproof. The thickness of the 'Gunite' covering varied from ¼ in. at the top of the wall to ½ in. at the bottom. Within 24 hours of the completion of the work, pumping was started and continued for approximately 40 hours, until the same side which had originally held 5½ ft. was

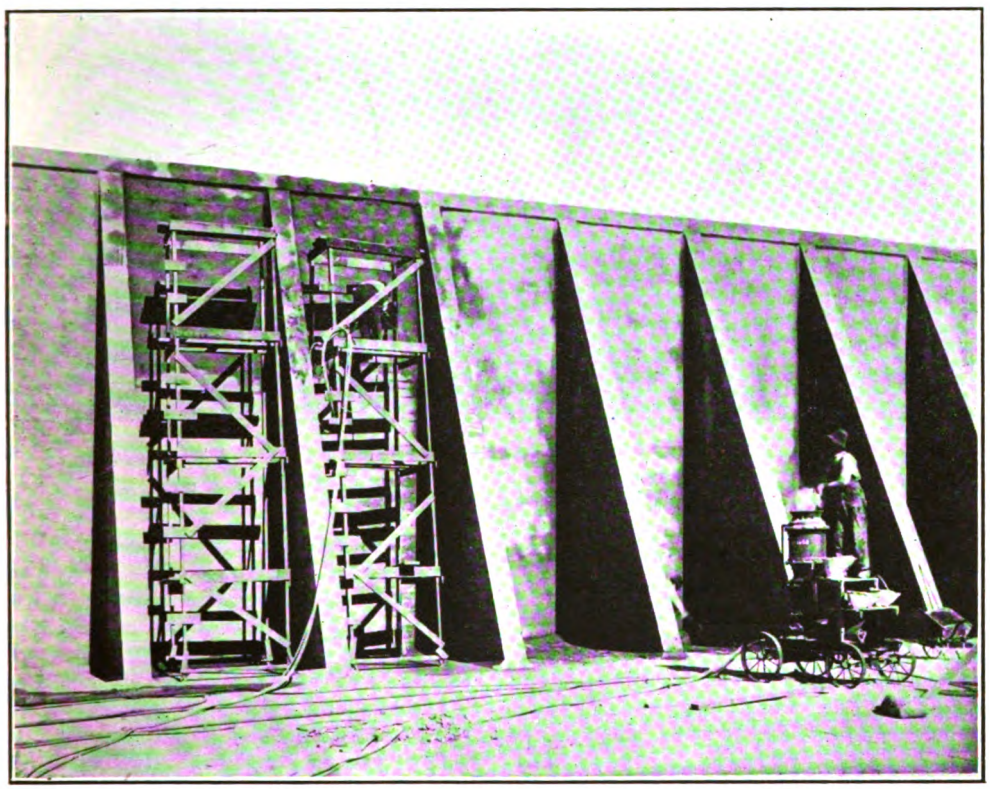

THE CEMENT GUN AT WORK.

*Vice-president Lilley & Thurston Co., Rialto Building, San Francisco.

Generated on 2024-09-29 23:42 GMT / https://hdl.handle.net/2027/uiug.30112007837674
Public Domain, Google-digitized / http://www.hathitrust.org/access_use#pd-google
Digitized by Google
Original from UNIVERSITY OF ILLINOIS AT URBANA-CHAMPAIGN

filled to 25½ ft. For the first 48 hours a few discolorations due to dampness appeared on the other side of the wall, but at the expiration of 72 hours these had all disappeared, leaving the face of the wall absolutely dry. The cement gun work was done by Lilley & Thurston Co. on the recommendation of the City Engineer and under the supervision of the Board of Public Works of San Francisco.

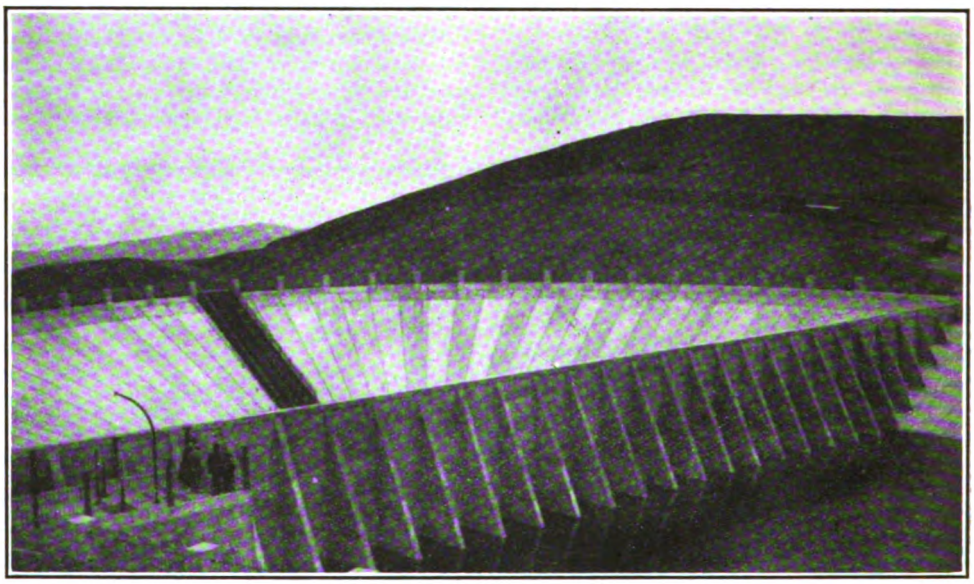

THE TWIN PEAKS RESERVOIR.

An Oil Switch For Industrial Applications

Those who are interested in the applications of electricity in industrial plants such as powder works, coal mines, cement mills, gas works, textile mills, and the like, especially where explosive gases or flying inflammable materials are present, will welcome the introduction of a new oil switch which can be satisfactorily used in such situations. Before designing this switch the conditions of operation in the places enumerated above and the difficulties to be overcome were carefully canvassed, with the result that the following qualities were incorporated in the design of the switch: (1) safety, by having all live parts entirely enclosed; (2) reliability, by constructing the switch so that it could be operated by unskilled operators; (3) durability, by having the best mechanical construction; (4) flexibility, by a combination of features adapting it to a wide range of requirements.

The switch is manufactured double and triple pole in capacities up to 300 amperes and 2500 volts, both non-automatic and automatic. The automatic switches are tripped by overload coils connected in series with the line and can be furnished in the following combinations: (1) with overload trip coils, instantaneous or time limit, with low-voltage release attachment; (2) with overload trip coils, instantaneous or time limit, without low-voltage release attachment; (3) low-voltage release only.

The switch leads are usually brought out through the sides and bottom of the switch frame, but if it is necessary to bring them out at the top, special covers can be provided. These are made in two pieces, one removable to secure access to the interior of the switch without disturbing the wiring, and the other supplied with holes for the leads. Covers can be furnished with porcelain bushings for open wiring, with holes for conduit wiring, or with holes for bell mouths to take triple conductor cable. These switches can also be supplied with special

Generated on 2024-09-29 23:43 GMT / https://hdl.handle.net/2027/uiug.30112007837674
Public Domain, Google-digitized / http://www.hathitrust.org/access_use#pd-google
Digitized by Google
Original from UNIVERSITY OF ILLINOIS AT URBANA-CHAMPAIGN

covers for mounting a series ammeter on top of the switch, to make, in effect, a complete induction-motor control outfit, thus dispensing with the usual panel and supports. The covers are also made in two parts, the front half carrying a bracket for mounting the ammeter, with procelain bushings for the instrument studs, while the rear half is removable to facilitate making connections to the switch and from the switch to the ammeter. The ammeter is a useful adjunct to the oil switch, as it indicates at all times the current taken by the motor and can be used to detect faults in the motor circuit, thus permitting immediate correction of minor troubles which might otherwise cause a shut-down.

Although these switches are practically dust-proof for ordinary conditions, when used in cement mills or similar situations extra precautions must be taken to exclude dust, and special gaskets can be furnished which will accomplish this purpose. An interlock can also be supplied, so that when the switch is used with induction motors employing resistance for starting or varying the speed, the switch cannot be closed unless the resistance is in the 'off' position. In plants where a large number of induction motors are used it is sometimes desirable to install a locking device in connection with the oil switch, so that an operator can shut down the motor to work on a machine and lock the switch; then no other person can start the motor, accidentally or otherwise, until the first operator, who holds the locking key, is ready and returns it. An arrangement to accomplish this can be furnished, which consists of a magnetic lock in connection with the low-voltage release and a special snap switch with removable key. Special indicating lamps are also used which are lighted when the oil switch is locked open and the key removed from the snap switch. If desired, the magnetic lock can be operated from several stations, the removal of the key from any one preventing the starting of the motor until all keys are in place.

These switches are known as the type 'F', form 'K-20', and are made by the General Electric Co., Schnectady, N. Y.

Baby Air-Compressor

By EDWARD A. RIX

The illustration shows a Baby air-compressor, suitable for 3000 lb. pressure, which was designed and manufactured by the Rix Compressed Air & Drill Co., San Francisco, for service in a submarine. The intake cylinder is 4½ in. diameter, having a displacement of 20 cu. ft. per minute. The intermediate cylinder is $1^{11}/_{16}$ in., and the high-pressure cylinder ¾ in., and the pressures run 90, 600, and 3000 lb., respectively. The revolutions per minute are 400, and the weight of the machine is 1200 lb. The intercooler is in the base. The machine is splash lubricated and runs without noise. There are jackets of ample capacity on all of the cylinders. In actual operation, the cooling is so efficient that the temperature of compression is reduced to atmospheric temperature between each stage, the result being that, inasmuch as the pressure ratios are small, the cylinder and valve heating is also small, and lubrication is efficient. There are no springs or valve complications of any kind in the machine, and for such heavy pressures it is unique in weight and dimensions and is adaptable to many kinds of service.

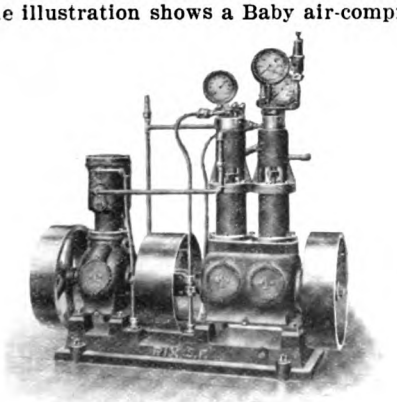

RIX HIGH-PRESSURE BABY COMPRESSOR.

Generated on 2024-09-29 23:44 GMT / https://hdl.handle.net/2027/uiug.30112007837674
Public Domain, Google-digitized / http://www.hathitrust.org/access_use#pd-google
Digitized by Google
Original from UNIVERSITY OF ILLINOIS AT URBANA-CHAMPAIGN

Catalogues Received

TAYLOR IRON & STEEL CO., of High Bridge, New Jersey, has issued an illustrated catalogue, No. 114, covering 'Tisco' manganese steel crusher and pulverizer parts.

C. L. BEST GAS TRACTION CO. has published an interesting catalogue showing its traction engines in detail. Bannon Engineering Co., 501 Sheldon Bdg., San Francisco, are local sales agents.

The TRIUMPH ICE MACHINERY CO. of Cincinnati, Ohio, has issued bulletins No. 501 to 509, illustrating and describing its special compressors and engines for ice machines, condensers, and brine coolers. H. F. Lyon Co., Monadnock Bdg., San Francisco, are local agents.

LILLEY & THURSTON CO., Rialto Bdg., San Francisco, local agents for the cement gun, have issued an attractive pamphlet describing the operation and use of this interesting accessory for engineering construction. It was written by O. P. Shelley and is a reprint from an article appearing in the *Architect and Engineer*.

BROWN HOISTING MACHINERY CO., Cleveland, Ohio, has published catalogue 'R', illustrating and describing freight-handling equipment, including electrically operated telphers. This catalogue is full of interest and shows the great progress that has been made in freight-handling apparatus in recent years.

Commercial Paragraphs

HERZOG & DAHL, 150 Steuart street, San Francisco, have recently been appointed agents for the De Laval steam turbine in California.

The HESS FLUME CO. has just completed its new plant at 2166-76 Fifteenth street, Denver, Colorado, for the manufacture of the Hess smooth interior flumes, head gates, pressure pipe, metal substructures, metal intakes and outlets, drops, self-registering water meters, etc., on very short notice.

THE Delaware, Lackawanna & Western Railroad Co. has placed an order with the WESTINGHOUSE ELECTRIC & MANUFACTURING CO. for its Nanticoke power plant at Plymouth, Pennsylvania, covering one 12-panel marble switchboard. The board is to control two 4000-kw. normal rating, 6600-kw. maximum rating, 4400-volt, 3-phase, 60-cycle turbo-generators; eight 2000-kw., 3-phase, 4400-volt feeders, and provision to be made for two future turbo-generators of the same rating as those mentioned above.

Personal

M. M. O'SHAUGHNESSY has returned to San Francisco from San Diego.

A. M. HUNT, of San Francisco, has been made consulting engineer for the city in the matter of the Hetch Hetchy water supply.

RUDOLPH DIESEL, inventor of the famous Diesel engine, has been made an honorary member of the American Society of Mechanical Engineers.

F. A. POST-NIKOV has been appointed inspecting engineer for the Big Meadows dam, designed by John S. Eastwood for the Great Western Power Company.

THE Montana Institute of Municipal Engineers has been organized at Helena, Montana, HENRY GERHARZ, of Billings, being elected president; CHAS. W. HELMICK, of Billings, vice-president; and CARL C. WIDENER, of Bozeman, secretary. These officers, with M. L. MORRIS, of Great Falls, and WILLIAM MCLEAN, of Lewistown, compose the board of directors.

Twelve representatives of the American Electric Railway Association have been in San Francisco on a tour of inspection, the party consisting of THOMAS N. MCCARTER, of the American Electric Railway Association of New Jersey; GEORGE H. HARRIES, of Kentucky; CHARLES N. BLACK, of the United Railroads of San Francisco; C. LOOMIS ALLEN, of the Newport News & Old Point Railway & Electric Co.; ARTHUR W. BRADY, of the Indiana Union Traction Co.; JAMES F. SHAW, of the Boston & Worcester Street Railway Co.; OSCAR T. CROSBY, of Wilmington & Philadelphia Traction Co.; W. L. CONWELL, of American Electric Railway Manufacturers' Association and of the Transportation Utilities Co.; JAMES H. MCGRAW, of the McGraw Publishing Co.; CHARLES C. PIERCE, of the railway department of the General Electric Co.; H. C. DONECKER, and ARTHUR WARREN, of the American Electric Railway Association.

Generated on 2024-09-29 23:41 GMT / https://hdl.handle.net/2027/uiug.30112007837674
Public Domain, Google-digitized / http://www.hathitrust.org/access_use#pd-google
Digitized by Google
Original from UNIVERSITY OF ILLINOIS AT URBANA-CHAMPAIGN